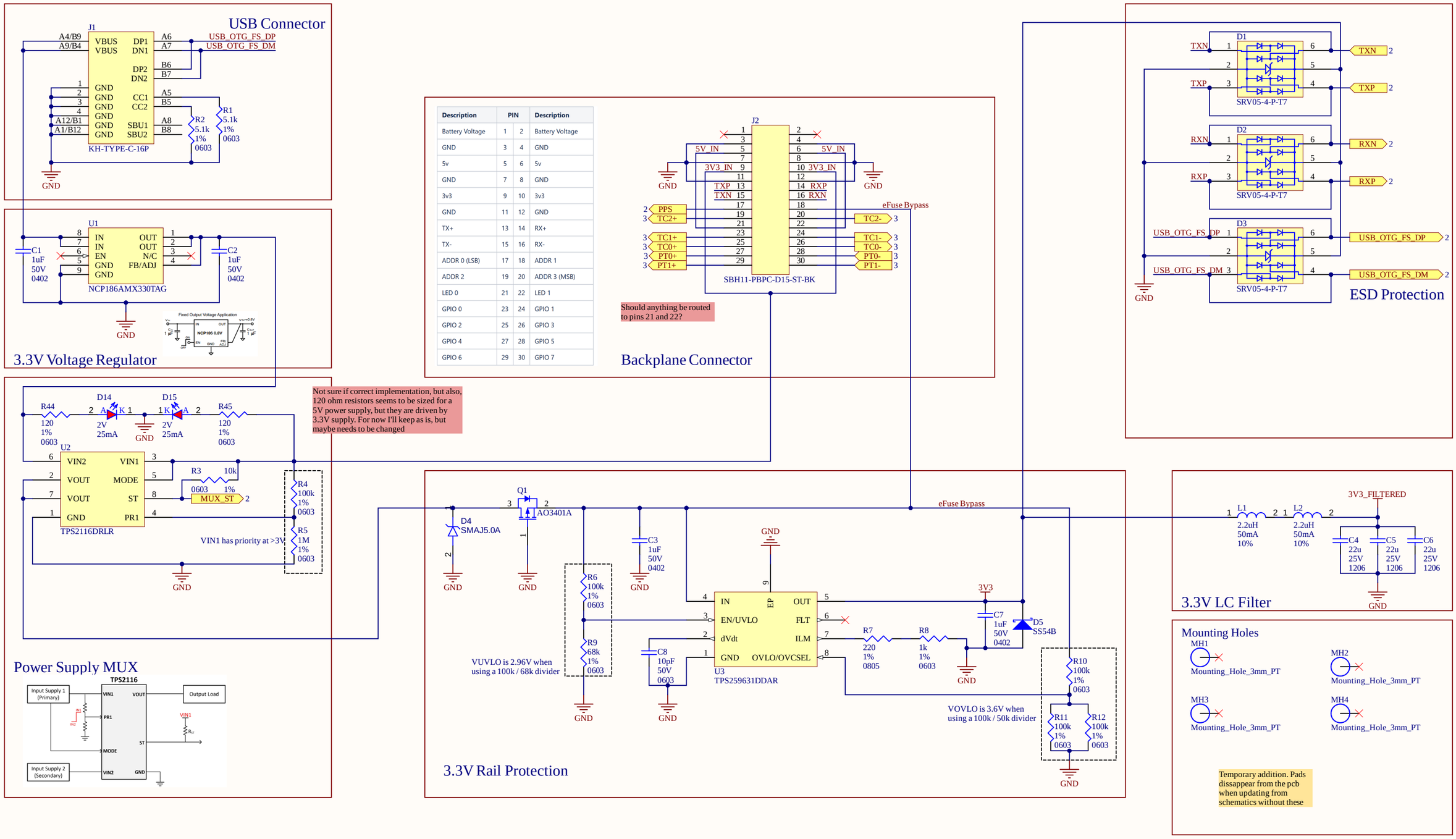

SHEET NAME: Backplane_Interface.SchDoc	PROJECT: Liquids_Module_v1.0.PrjPcb
ENGINEER: *	DATE: 2/13/2026

RIT LAUNCH INITIATIVE

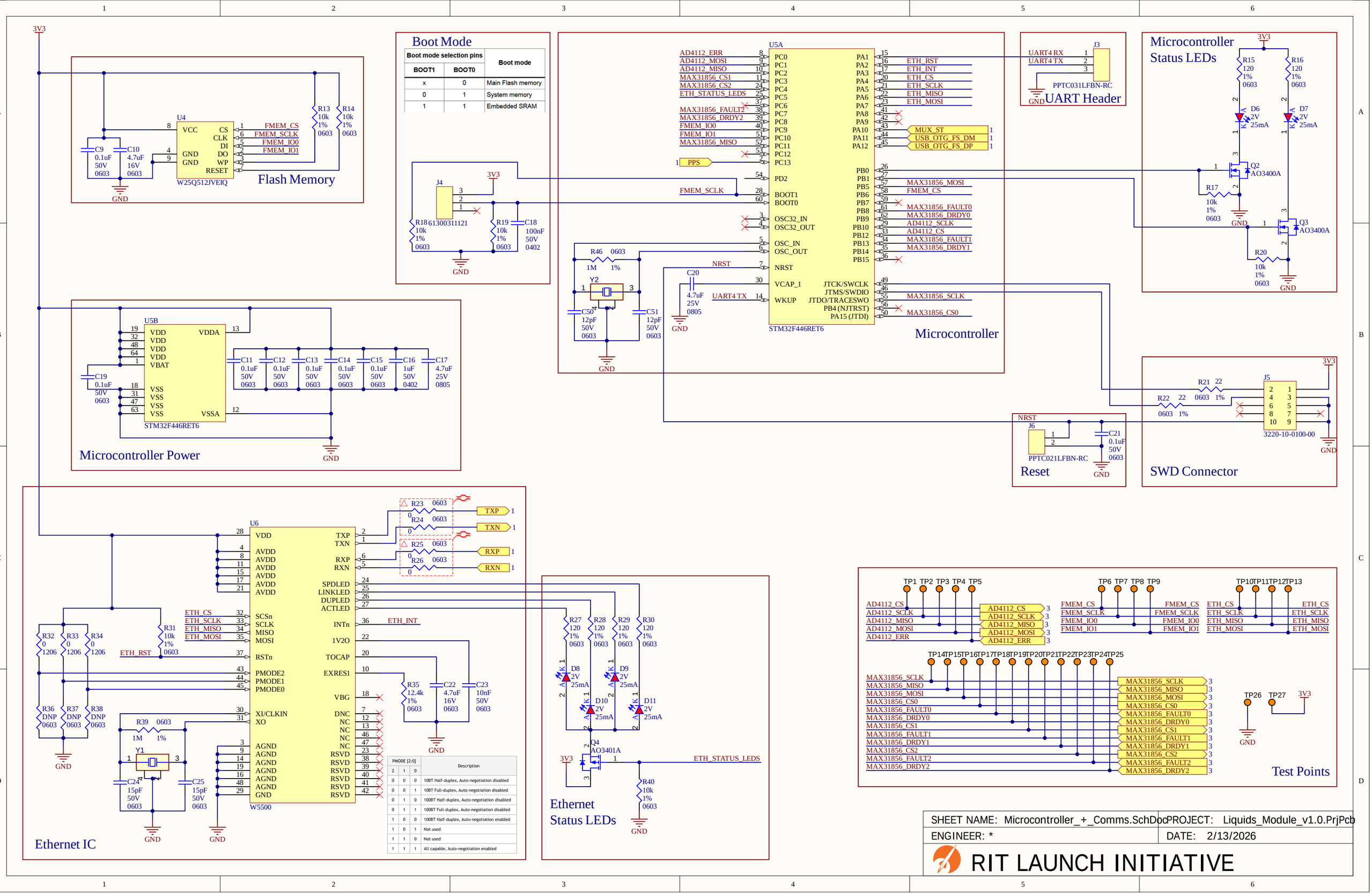

PMODE [2:0]			Description
2	1	0	
0	0	0	10BT Half-duplex, Auto-negotiation disabled
0	0	1	10BT Full-duplex, Auto-negotiation disabled
0	1	0	100BT Half-duplex, Auto-negotiation disabled
0	1	1	100BT Full-duplex, Auto-negotiation disabled
1	0	0	100BT Half-duplex, Auto-negotiation enabled
1	0	1	Not used
1	1	0	Not used
1	1	1	All capable, Auto-negotiation enabled

SHEET NAME: Microcontroller_+_Comms.SchDoc	PROJECT: Liquids_Module_v1.0.PrjPcb
ENGINEER: *	DATE: 2/13/2026

RIT LAUNCH INITIATIVE

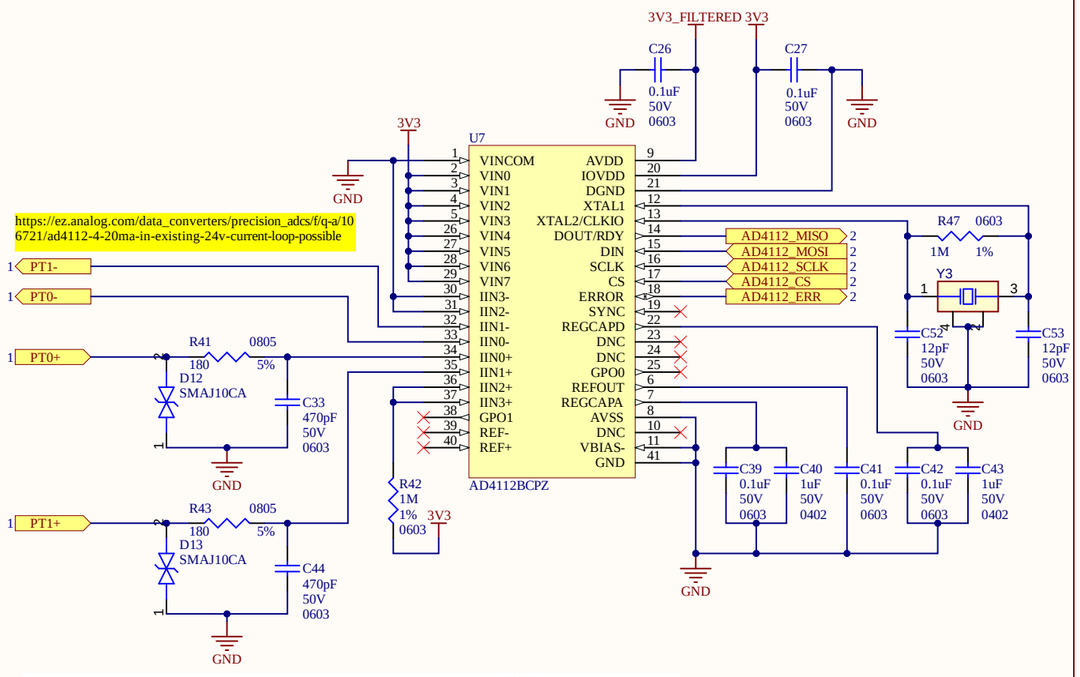

Pressure Transducer ADC

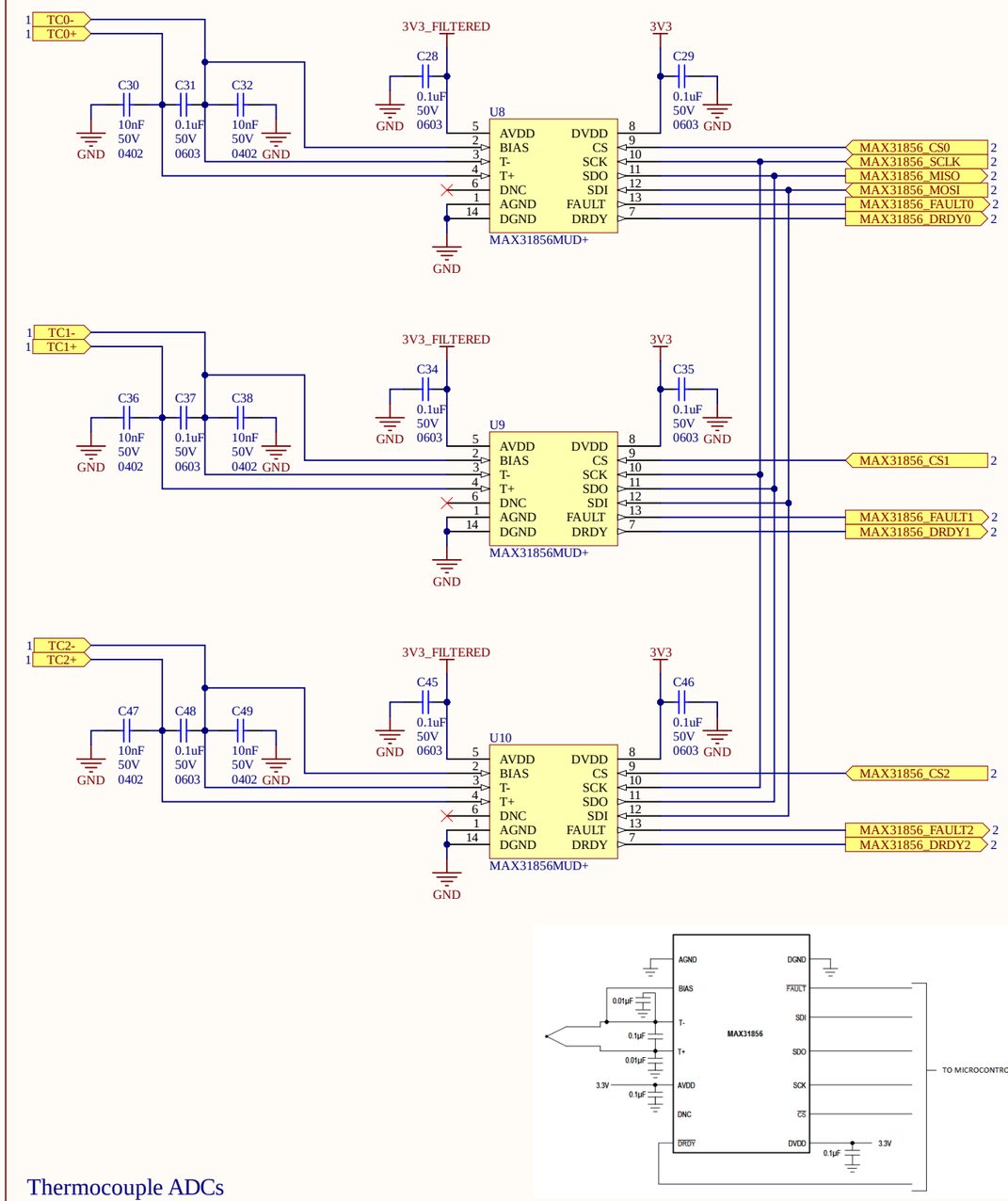

Thermocouple ADCs

SHEET NAME: ADCs.SchDoc	PROJECT: Liquids_Module_v1.0.PrjPcb
ENGINEER: *	DATE: 2/13/2026

RIT LAUNCH INITIATIVE