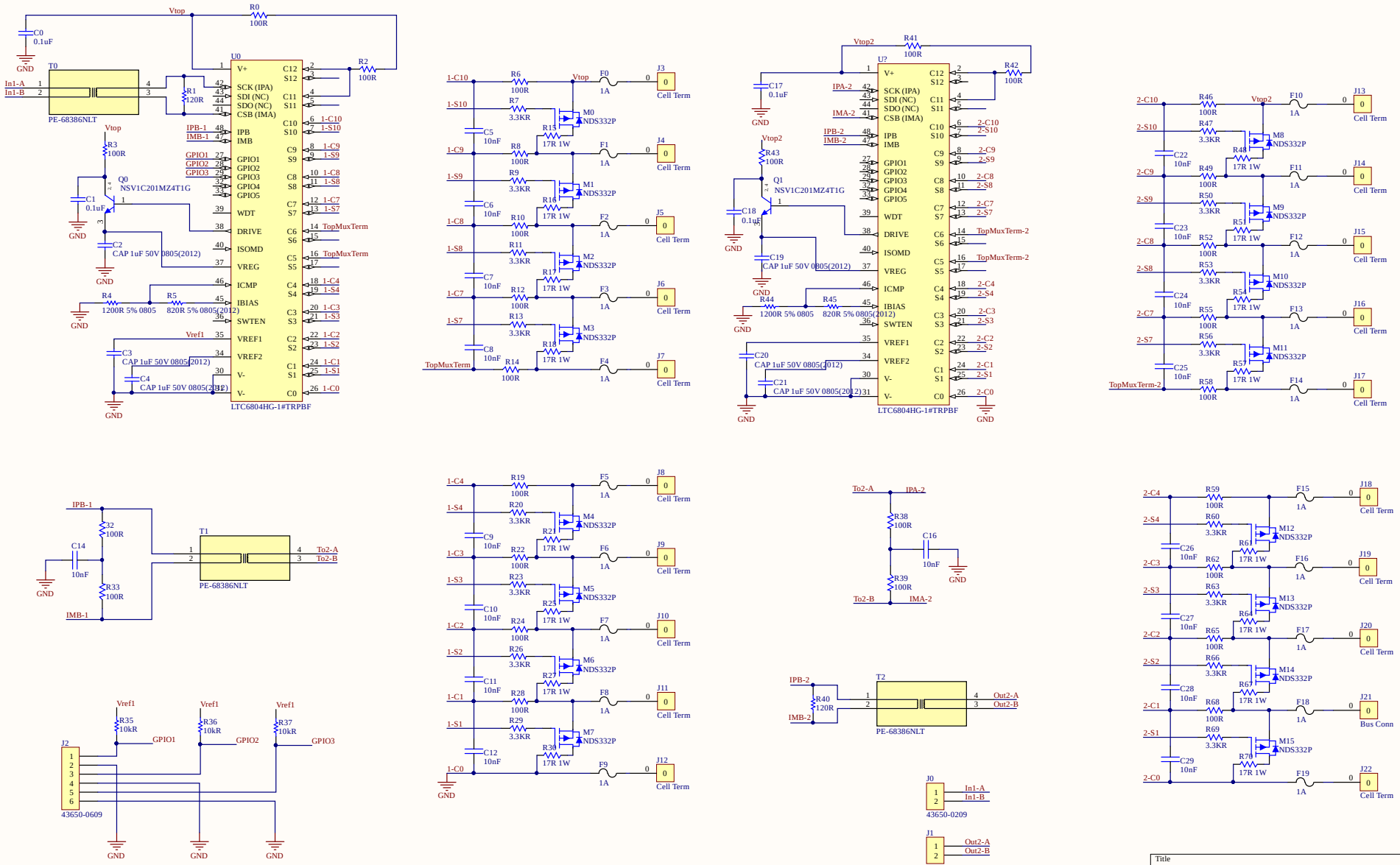

Title		
Size: Tabloid	Number	Revision
Date: 10/2/2020		Sheet of
File: \\..\BMSSlaveSchematic.SchDoc		Drawn By: