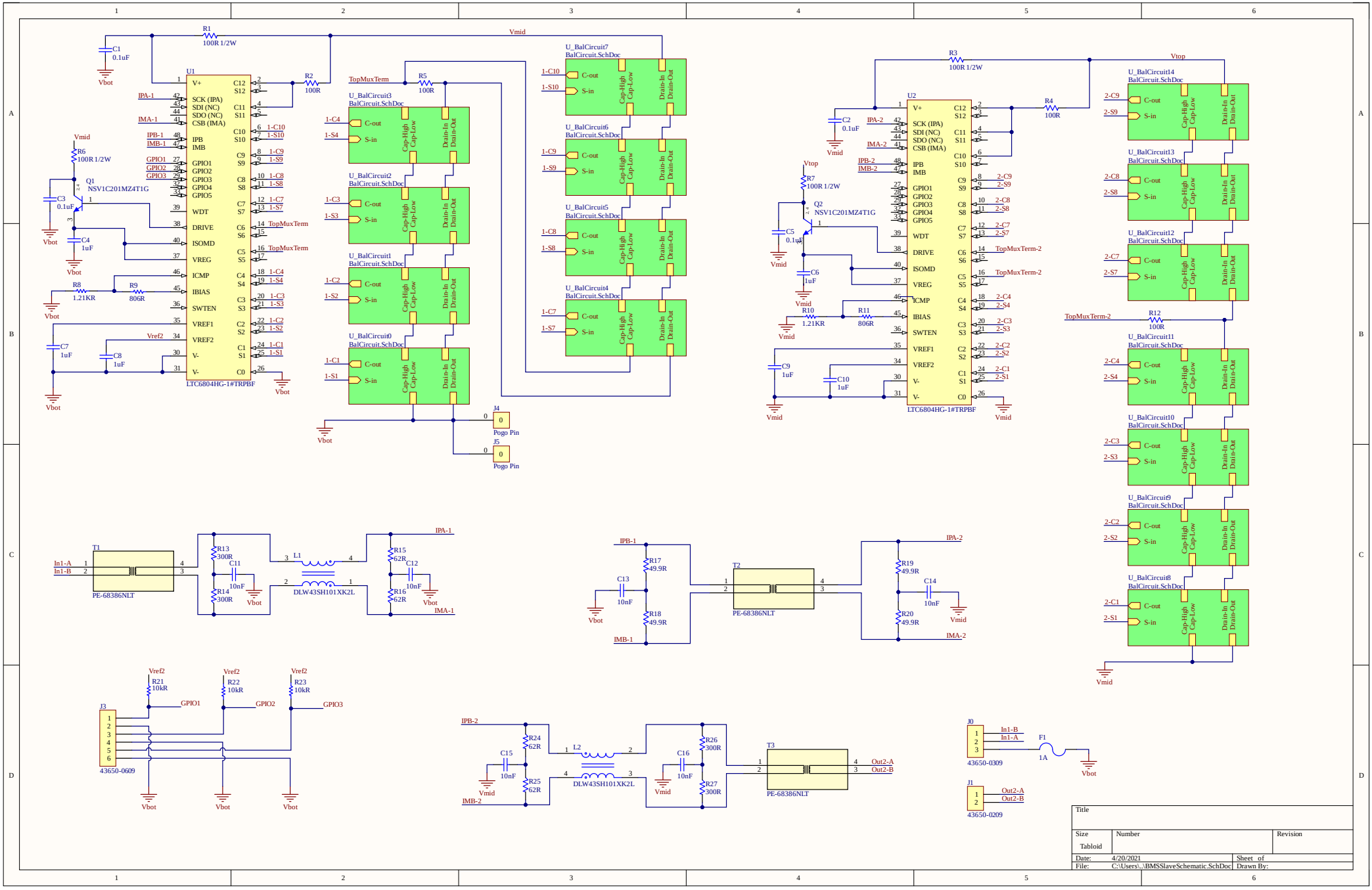
U1
LTC6804HG-1#TRPBF
U2
LTC6804HG-1#TRPBF
R1 100R 1/2W
R2 100R
R3 100R 1/2W
R4 100R
R5 100R
R12 100R
Vmid
Vtop
Vbot
TopMuxTerm
TopMuxTerm-2
Vref2
Q1 NSV1C201MZ4T1G
Q2 NSV1C201MZ4T1G
U_BalCircuit0 BalCircuit.SchDoc
U_BalCircuit1 BalCircuit.SchDoc
U_BalCircuit2 BalCircuit.SchDoc
U_BalCircuit3 BalCircuit.SchDoc
U_BalCircuit4 BalCircuit.SchDoc
U_BalCircuit5 BalCircuit.SchDoc
U_BalCircuit6 BalCircuit.SchDoc
U_BalCircuit7 BalCircuit.SchDoc
U_BalCircuit8 BalCircuit.SchDoc
U_BalCircuit9 BalCircuit.SchDoc
U_BalCircuit10 BalCircuit.SchDoc
U_BalCircuit11 BalCircuit.SchDoc
U_BalCircuit12 BalCircuit.SchDoc
U_BalCircuit13 BalCircuit.SchDoc
U_BalCircuit14 BalCircuit.SchDoc
C-out
S-in
Cap-High
Cap-Low
Drain-In
Drain-Out
J4 Pogo Pin
J5 Pogo Pin
T1 PE-68386NLT
T2 PE-68386NLT
T3 PE-68386NLT
L1 DLW43SH101XK2L
L2 DLW43SH101XK2L
J3 43650-0609
J0 43650-0309
J1 43650-0209
F1 1A
Title
Size Tabloid
Number
Revision
Date: 4/20/2021
Sheet of
File: C:\Users\..\BMSSlaveSchematic.SchDoc
Drawn By:

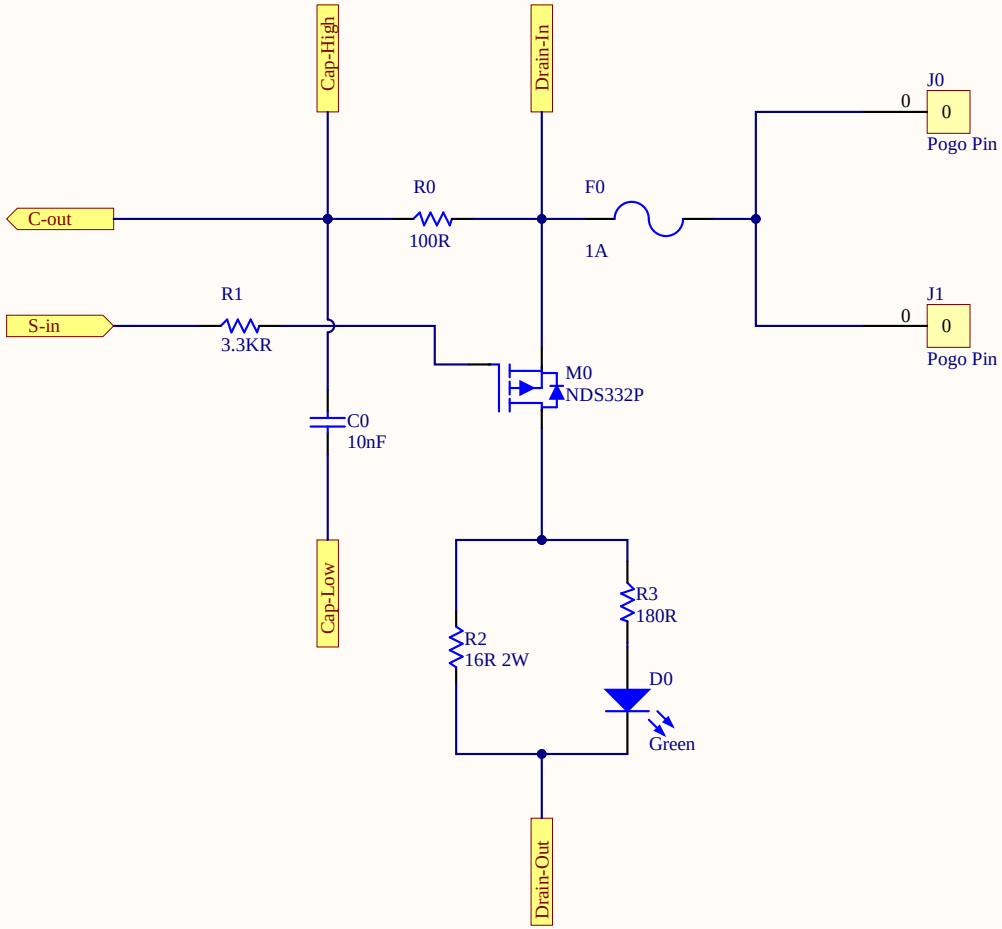

Title		
Size A	Number	Revision
Date: 4/20/2021		Sheet of
File: C:\Users\..\BalCircuit.SchDoc		Drawn By:

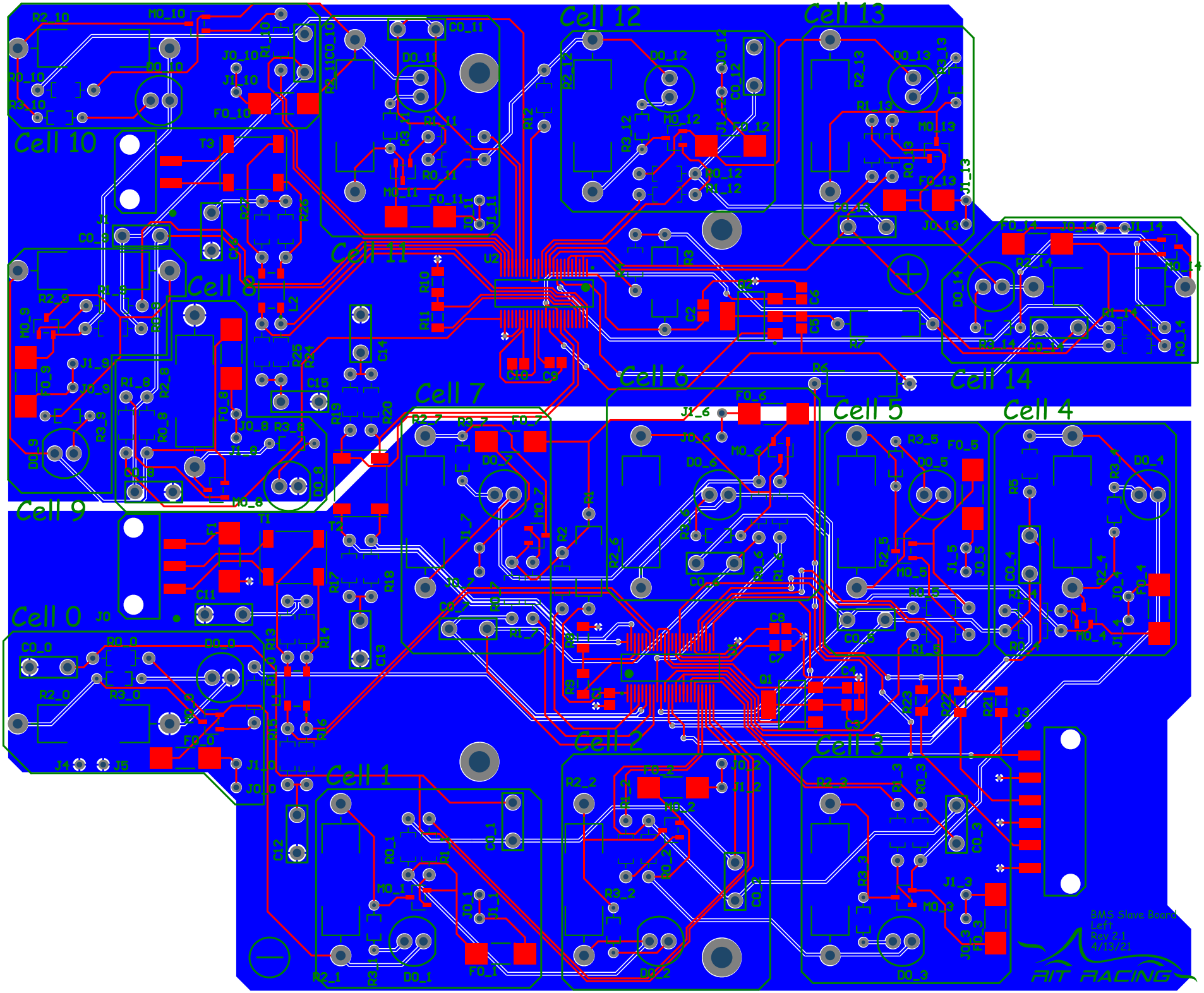
Cell 12
Cell 13
Cell 10
Cell 11
Cell 8
Cell 7
Cell 6
Cell 14
Cell 5
Cell 4
Cell 9
Cell 0
Cell 2
Cell 3
Cell 1
BMS Slave Board
Left
Rev 2.1
4/13/21
RIT RACING

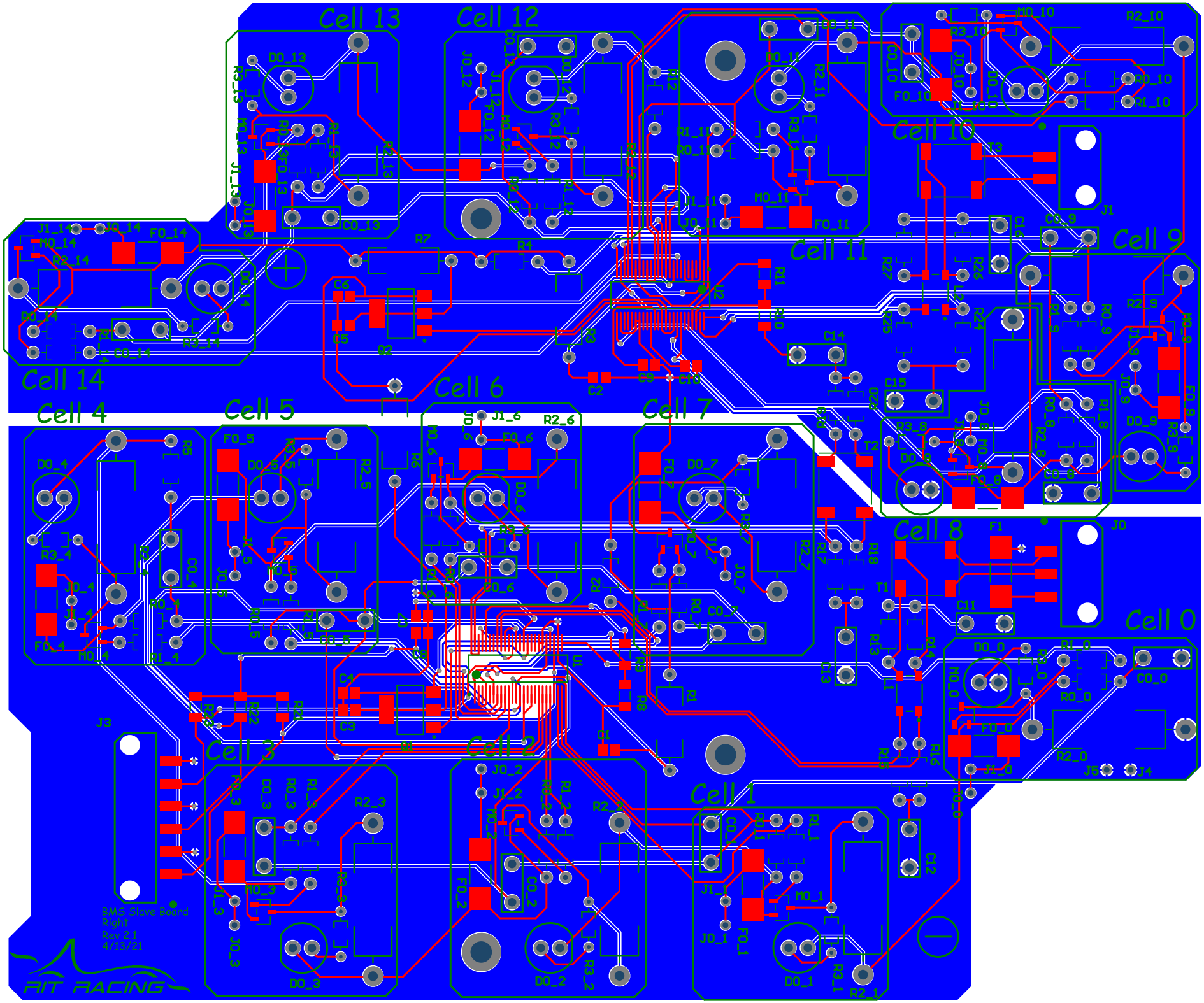
Cell 13
Cell 12
Cell 10
Cell 11
Cell 9
Cell 14
Cell 6
Cell 4
Cell 5
Cell 7
Cell 8
Cell 0
Cell 3
Cell 2
Cell 1
BMS Slave Board
Right
Rev 2.1
4/13/21
RIT RACING