KA Pronto4 Quick Start Guide

Introduction

This document details the quick start procedure for the KA Pronto4 system.

Quick Start

Required items to use the Pronto4 system:

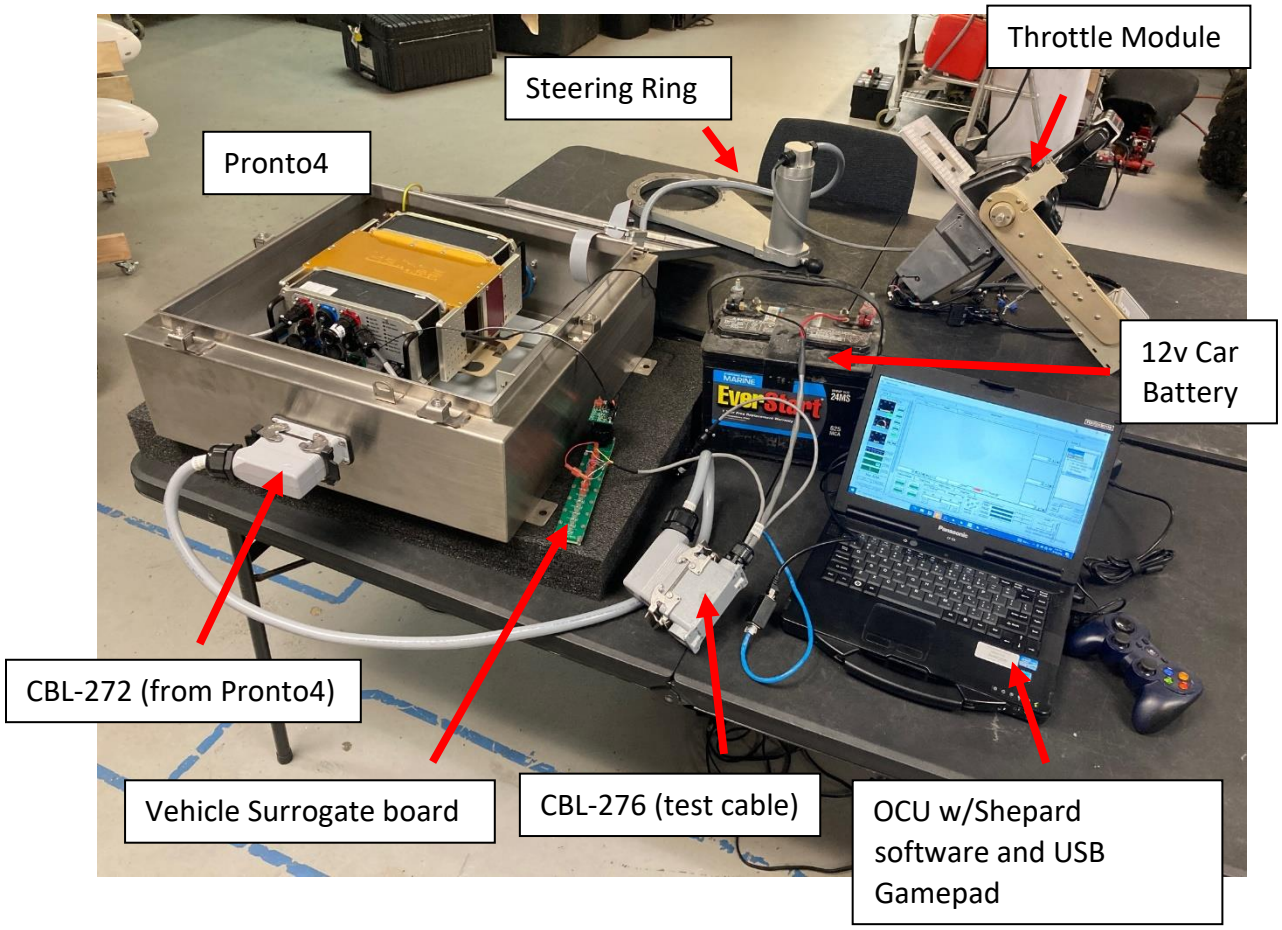

- KA Pronto4 system
- KA OCU laptop
- 12v power source (car battery recommended)
- CBL-272
- CBL-276
- Vehicle Surrogate board **OR** 12v power cable (from battery to power Enable in pin)
- USB Gamepad
- Ethernet cable

Kairos Autonomi
© 2022

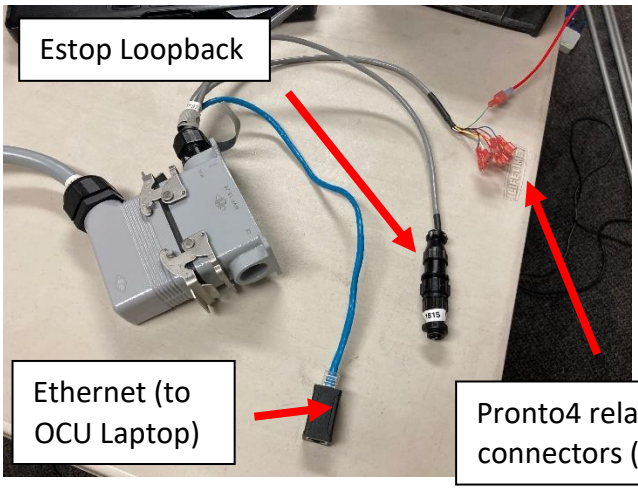

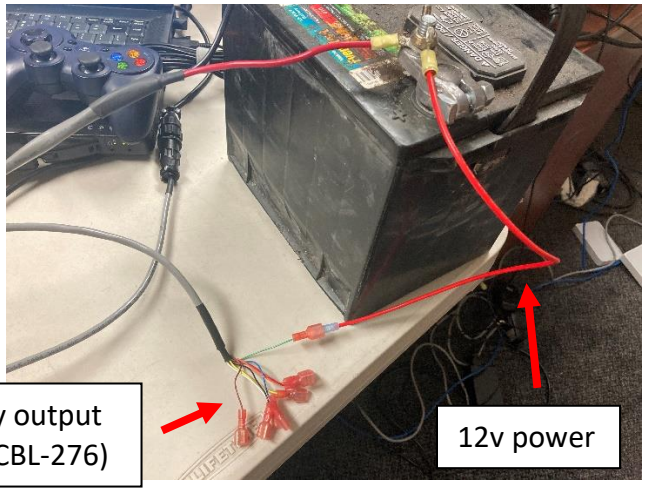

- Alternate wiring schematic (no vehicle surrogate board present)
    - 12v battery power connects to **Enable In** connector from CBL-276

Estop loopback provided in small canvas bag

To use the Pronto4:

1) **Connect** Pronto4 to CBL-272 and **connect** CBL-272 to CBL-276 (test cable)

2) **Connect** the vehicle surrogate board to the Pronto4 via port **P208** (will use CPC4 connector running from vehicle surrogate board)

    a. Alternately, if no surrogate board is present, power the **Enable In** pin from CBL-276 with 12v power from the car battery

3) **Connect** the CPC4 Estop loopback connector to CBL-276 if disconnected

4) **Power** the Pronto4 system using car battery (Battery leads part of CBL-276)

5) **Power on** the Pronto4 using the On/Off VIM switch on the case of the Pronto4 enclosure

6) **Connect** ethernet cable from CBL-276 to OCU laptop.

7) **Connect** USB gamepad to OCU laptop

8) Start **"djBasis.exe"** from the OCU laptop. The Kairos control program **Shepard** will open when djBasis.exe is opened

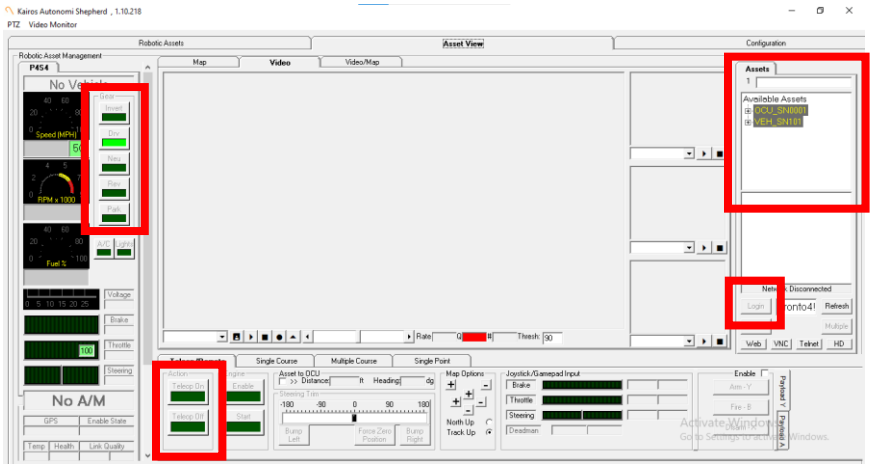

9) Under **Assets**, identify the system currently connected to the OCU laptop. **Select** the asset and click **Login**

10) Toggle **Tele-op On** once logged in to the vehicle. Hold **LB** or **RB** and select **DRV** on the transmission shift to allow vehicle motion

11) Vehicle controls with the gamepad are:

    a. LB or RB – Motion Enable
    b. Left Thumbstick – Steering (Left/Right)
    c. Right Thumbstick – Throttle/Brake (Up/Down)

This will enable control of the Pronto4 system through the KA OCU laptop.

Alternative Quick Start using ThinClient Joyhost device:
Required items to use the Pronto4 system without an OCU laptop:

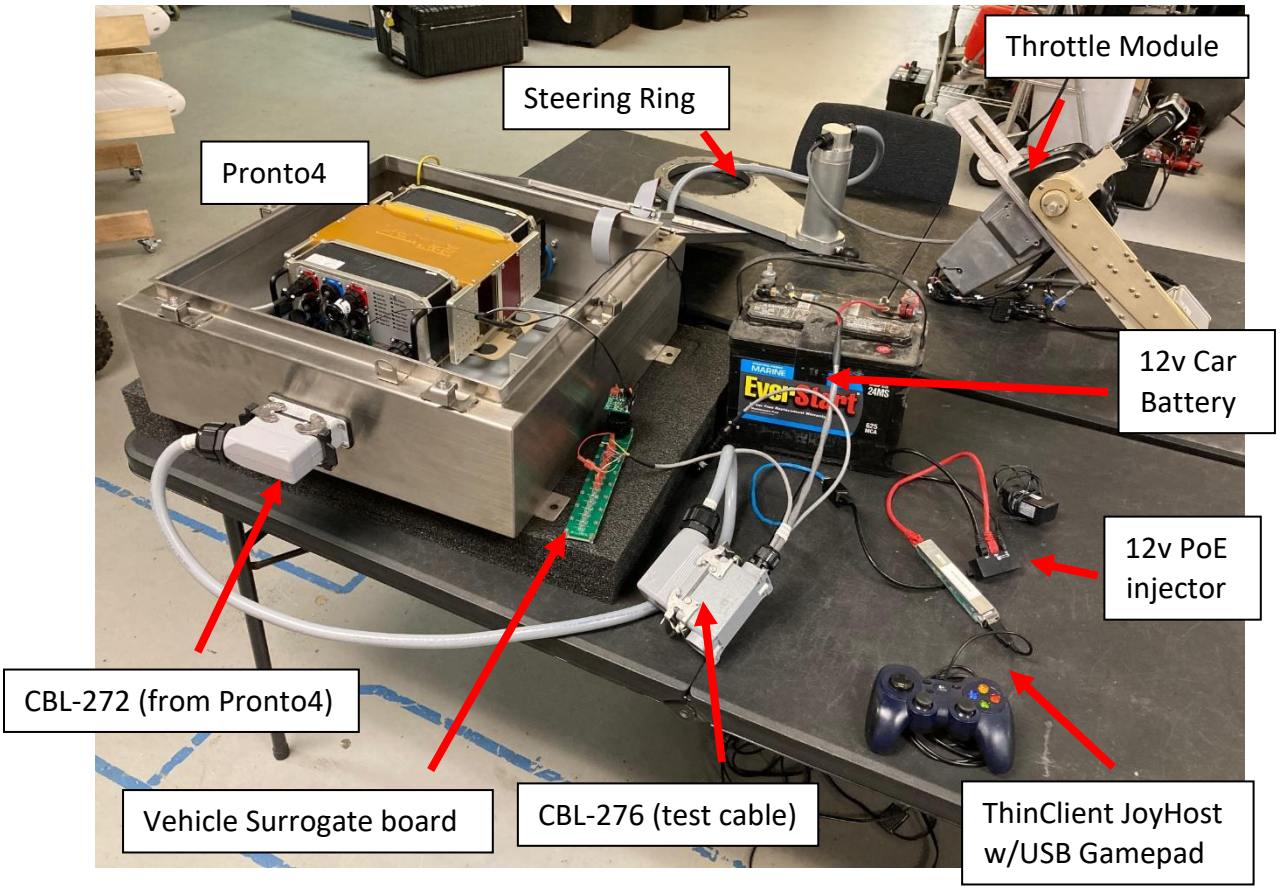

- KA Pronto4 system
- KA ThinClient Joyhost, configured to operate the above listed system (labeled on ThinClient)
- 12v power source (car battery recommended)
- 12v PoE injector for ThinClient Joyhost
- CBL-272
- CBL-276
- Vehicle Surrogate board **OR** 12v power cable (from battery to power Enable in pin)
- USB Gamepad
- Ethernet cable

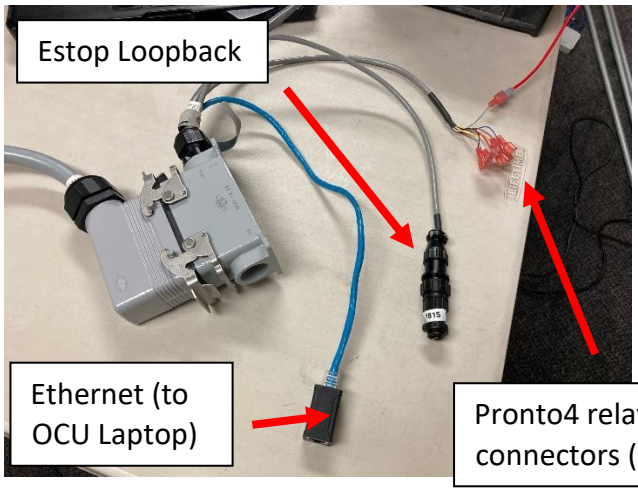

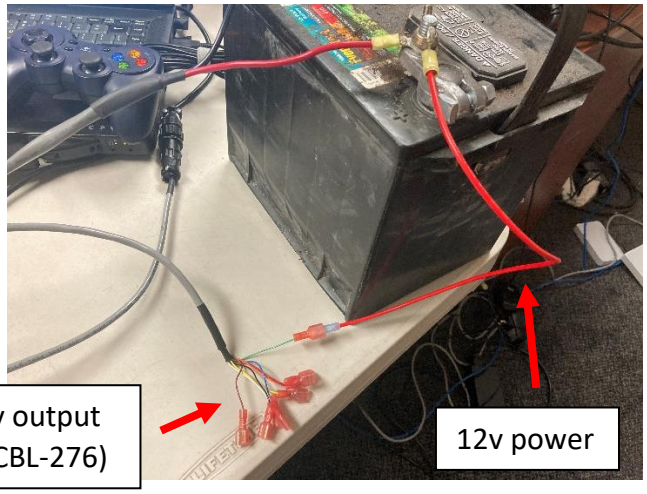

- Alternate wiring schematic (no vehicle surrogate board present)
    - 12v battery power connects to **Enable In** connector from CBL-276

Estop loopback provided in small canvas bag

1) **Connect** Pronto4 to CBL-272 and **connect** CBL-272 to CBL-276 (test cable)

2) **Connect** the vehicle surrogate board to the Pronto4 via port **P208** (will use CPC4 connector running from vehicle surrogate board)

    a. Alternately, if no surrogate board is present, power the **Enable In** pin from CBL-276 with 12v power from the car battery

3) **Connect** the CPC4 Estop loopback connector to CBL-276 if disconnected

4) **Power** the Pronto4 system using car battery (Battery leads part of CBL-276)

5) **Power on** the Pronto4 using the On/Off VIM switch on the case of the Pronto4 enclosure

6) **Power** the ThinClient JoyHost using the 12v PoE injector (or similar Power over Ethernet method)

7) **Connect** ethernet cable from CBL-276 to ThinClient JoyHost

8) **Connect** USB gamepad to ThinClient JoyHost

9) Vehicle controls with the gamepad are:

    a. LB or RB – Motion Enable
    b. Left Thumbstick – Steering (Left/Right)
    c. Right Thumbstick – Throttle/Brake (Up/Down)

This will enable control of the Pronto4 system through the ThinClient JoyHost device.