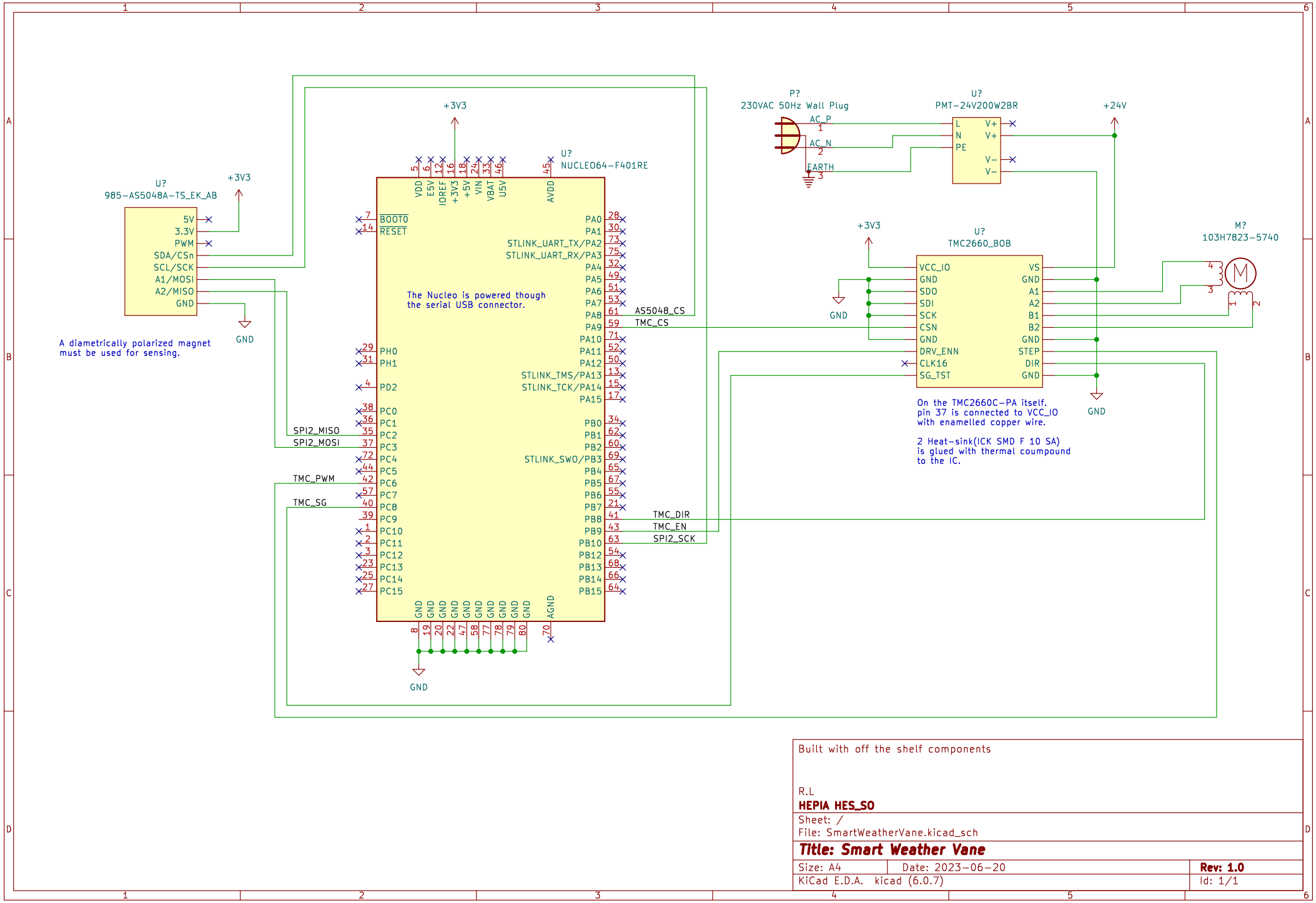

Built with off the shelf components

R.L

HEPIA HES_SO

Sheet: /

File: SmartWeatherVane.kicad_sch

Title: Smart Weather Vane

Size: A4	Date: 2023-06-20	**Rev: 1.0**
KiCad E.D.A. kicad (6.0.7)		Id: 1/1