Which side of the Peltier element will heat up or cool in this setup?

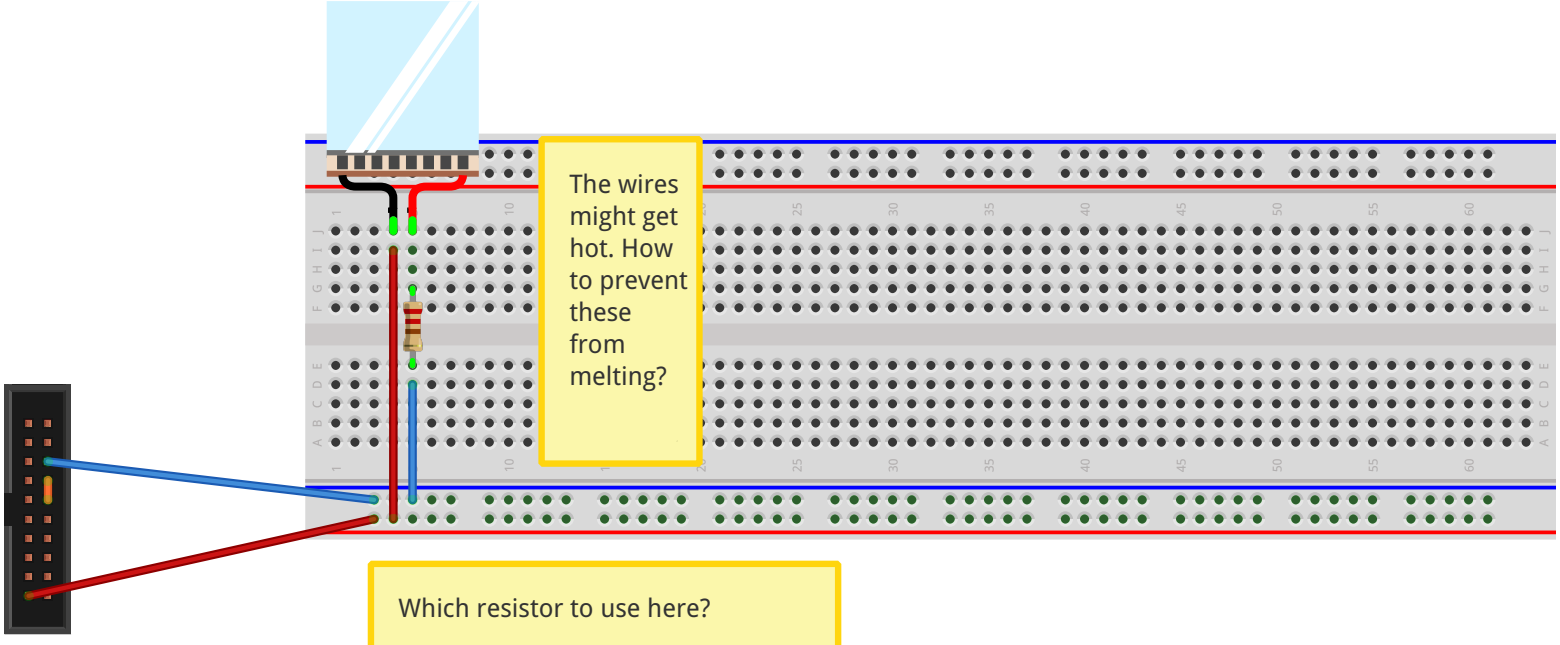

The wires might get hot. How to prevent these from melting?

Which resistor to use here?

We do have larger resistors to cope with higher currents.

Which resistor will hold?

External power supply
Pin bottom left = +12 VDC
Pin top left = GND
Check this!

The orange connection will make the fan turn (upper pin = PS_ON, lower pin = GND)

Made with Fritzing.org