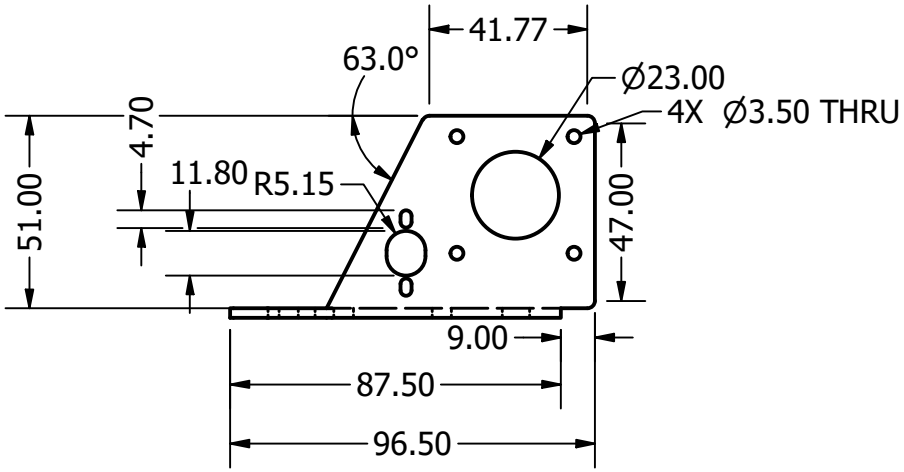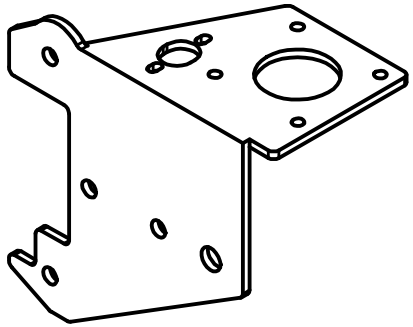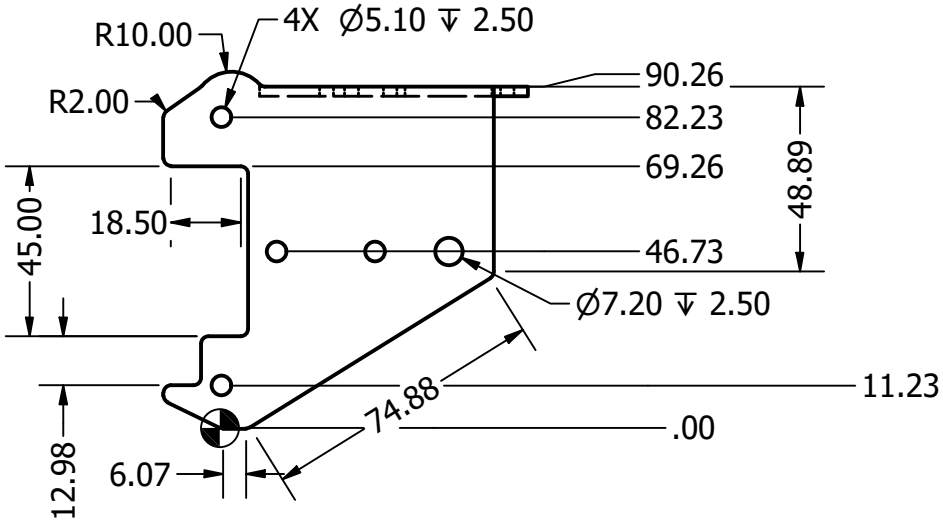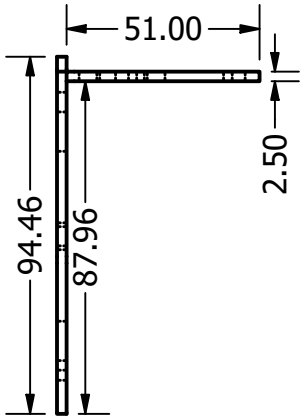DRAWN Richard Malstrom	4/19/2025	Pennwest California
CHECKED		
QA		TITLE
MFG		
APPROVED		E Motor Bracket
		SIZE A / DWG NO E3D-BKT-010 / REV 1
		SCALE 1 / 2 / SHEET 1 OF 1