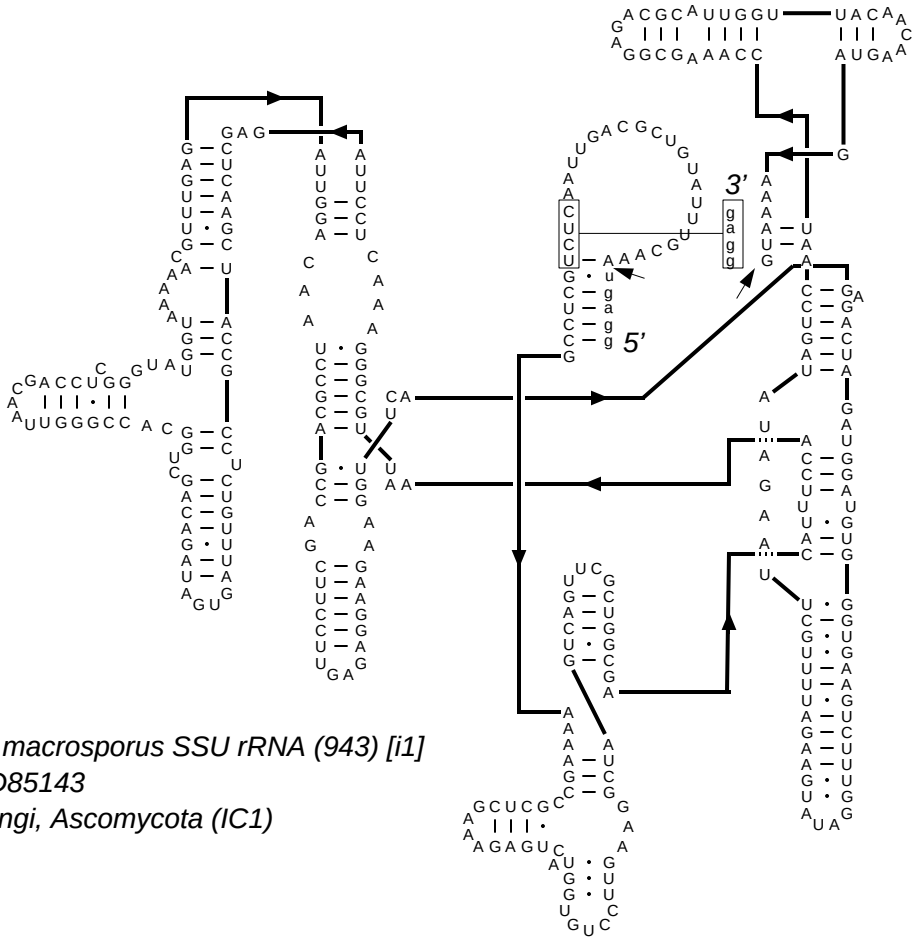

Protomyces macrosporus SSU rRNA (943) [i1]
GenBank# D85143
Eucarya, Fungi, Ascomycota (IC1)
Jul 1, 1996

Citation and related information available at http://www.rna.ccbb.utexas.edu