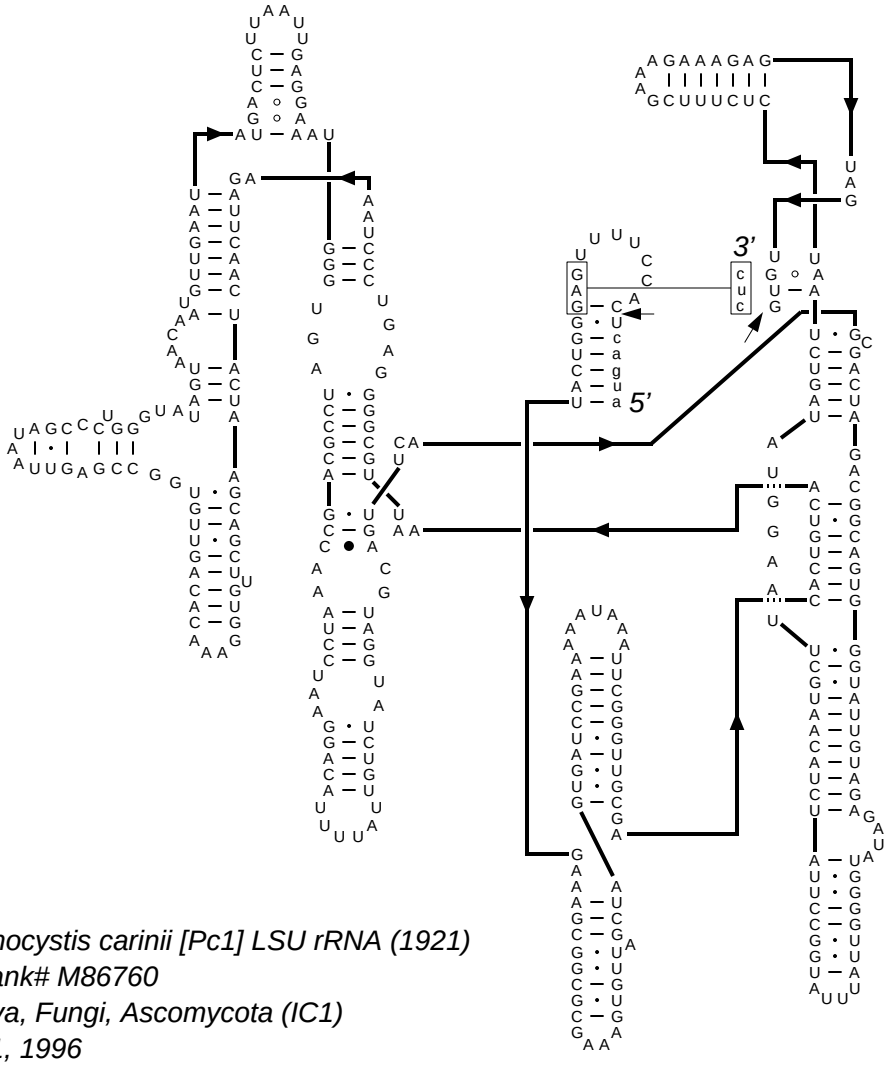

Pneumocystis carinii [Pc1] LSU rRNA (1921)
GenBank# M86760
Eucarya, Fungi, Ascomycota (IC1)
Feb 21, 1996

Citation and related information available at http://www.rna.ccbb.utexas.edu