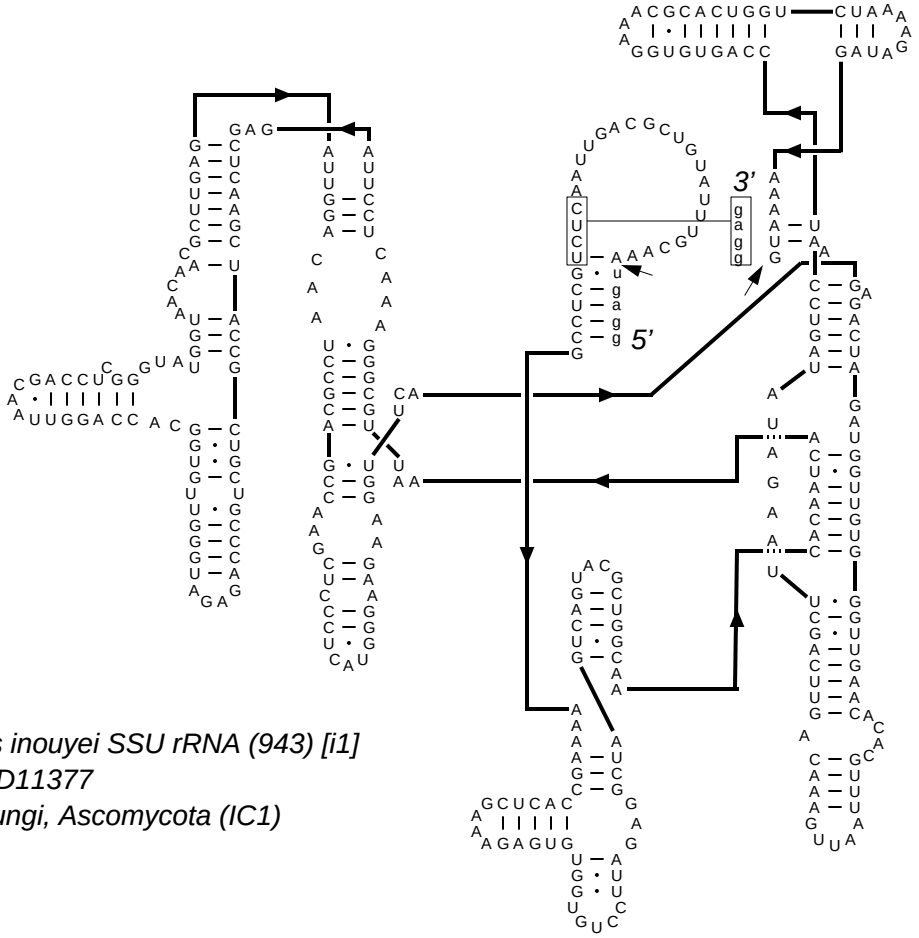

Protomyces inouyei SSU rRNA (943) [i1]
GenBank# D11377
Eucarya, Fungi, Ascomycota (IC1)
Jul 2, 1996

Citation and related information available at http://www.rna.ccbb.utexas.edu