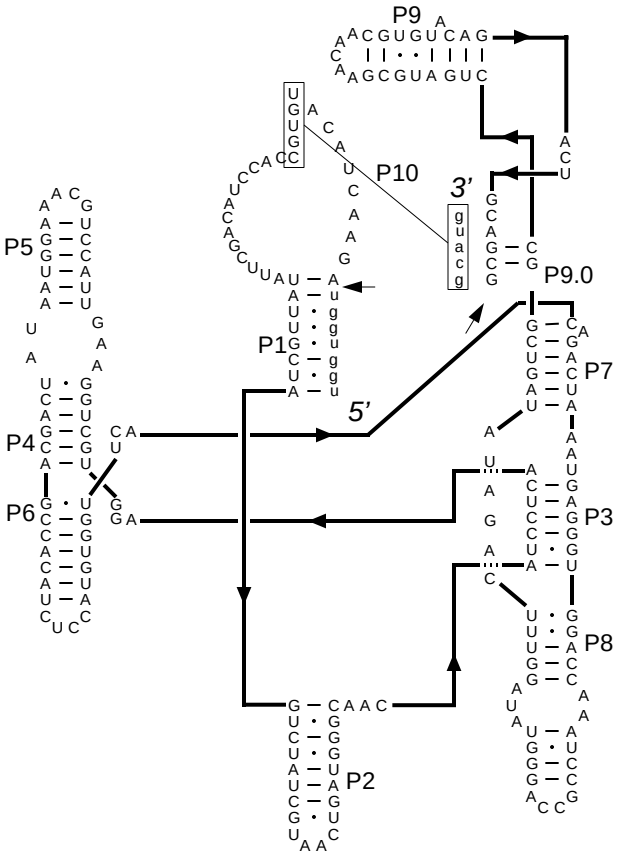

Stegobium paniceum SSU rRNA (1052) [i3]
GenBank# D49657
Eucarya, Fungi, Ascomycota (UNK)
Jul 12, 1996

Citation and related information available at http://www.rna.ccbb.utexas.edu