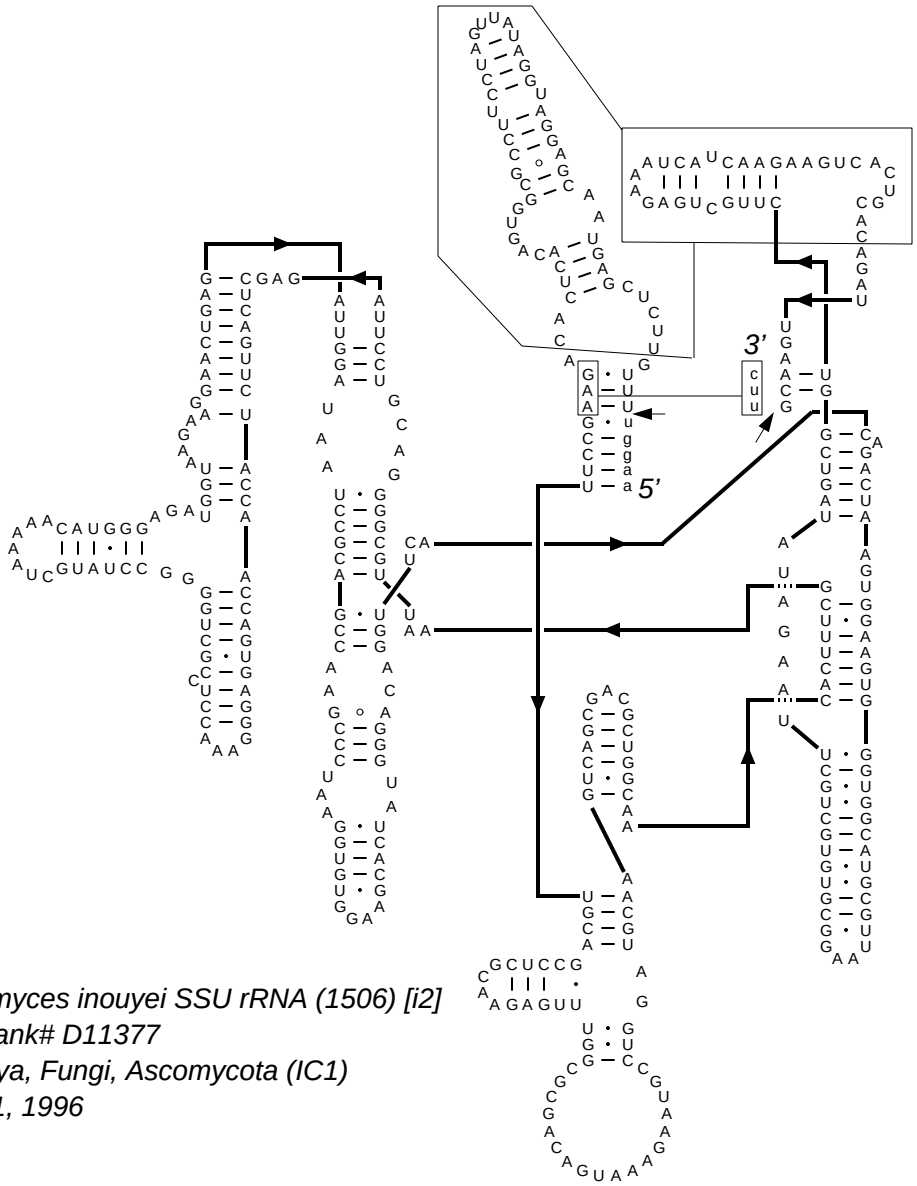


*Protomyces inouyei SSU rRNA (1506) [i2]*
*GenBank# D11377*
*Eucarya, Fungi, Ascomycota (IC1)*
*Jan 31, 1996*

**Citation and related information available at http://www.rna.ccbb.utexas.edu**