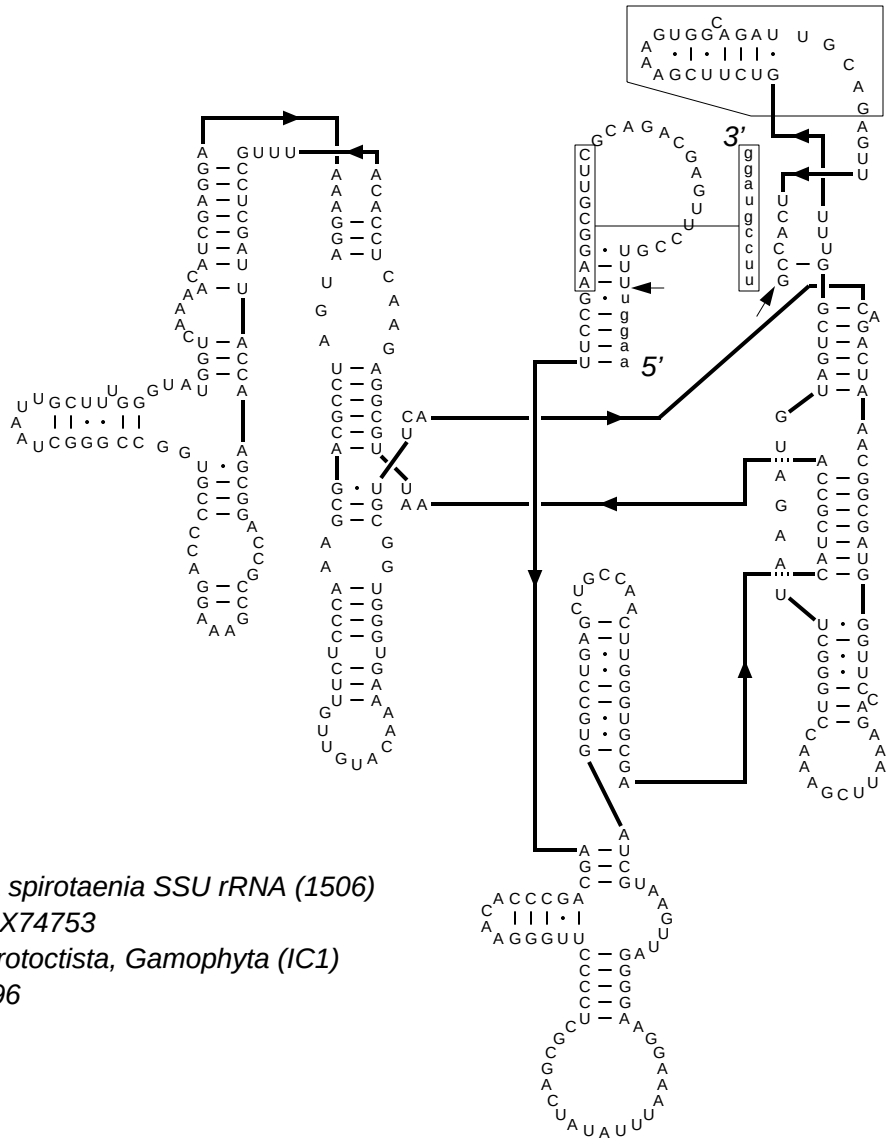

Genicularia spirotaenia SSU rRNA (1506)
GenBank# X74753
Eucarya, Protoctista, Gamophyta (IC1)
Jan 30, 1996

Citation and related information available at http://www.rna.ccbb.utexas.edu