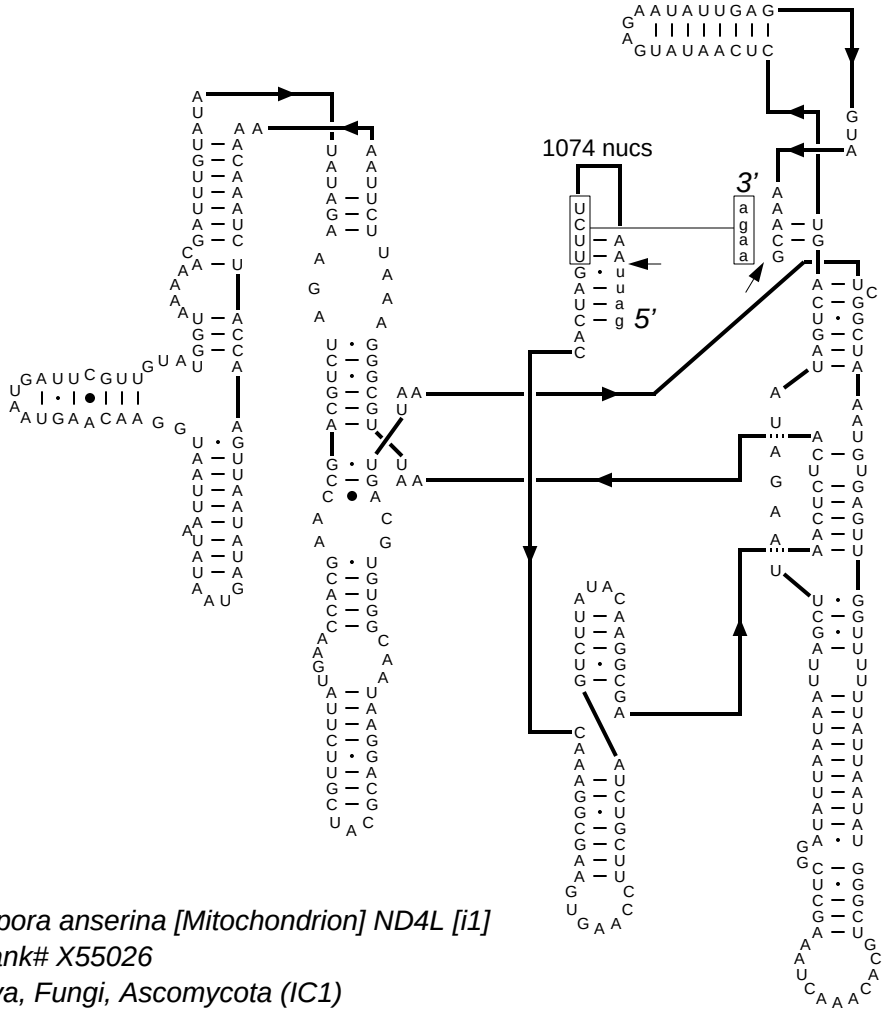

Podospora anserina [Mitochondrion] ND4L [i1]
GenBank# X55026
Eucarya, Fungi, Ascomycota (IC1)
Feb 21, 1996

Citation and related information available at http://www.rna.ccbb.utexas.edu