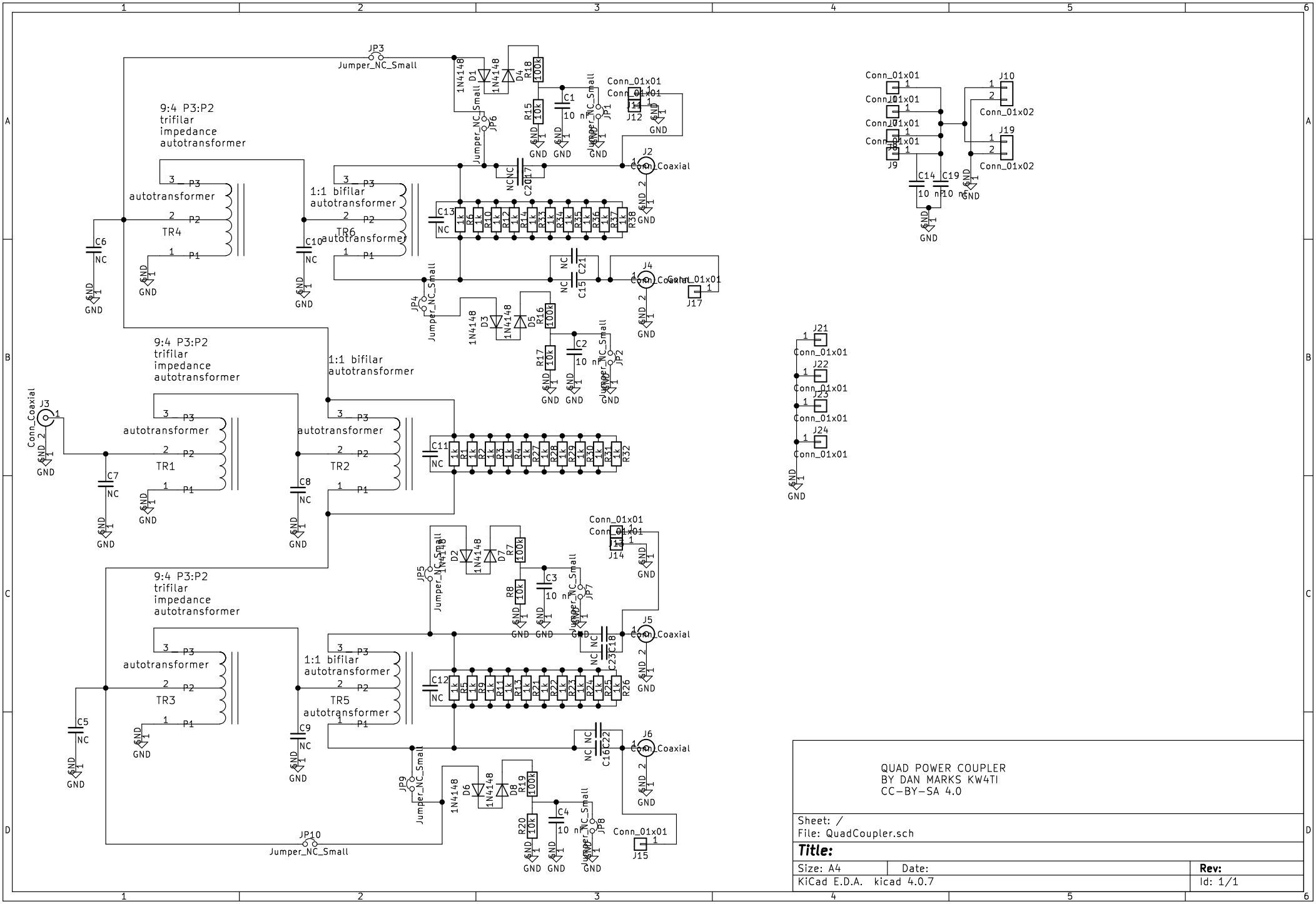
9:4 P3:P2
trifilar
impedance
autotransformer
1:1 bifilar
autotransformer
TR1
TR2
TR3
TR4
TR5
TR6
Conn_Coaxial
Conn_01x01
Conn_01x02
Jumper_NC_Small
1N4148
GND
QUAD POWER COUPLER
BY DAN MARKS KW4TI
CC-BY-SA 4.0
Sheet: /
File: QuadCoupler.sch
Title:
Size: A4
Date:
Rev:
KiCad E.D.A. kicad 4.0.7
Id: 1/1