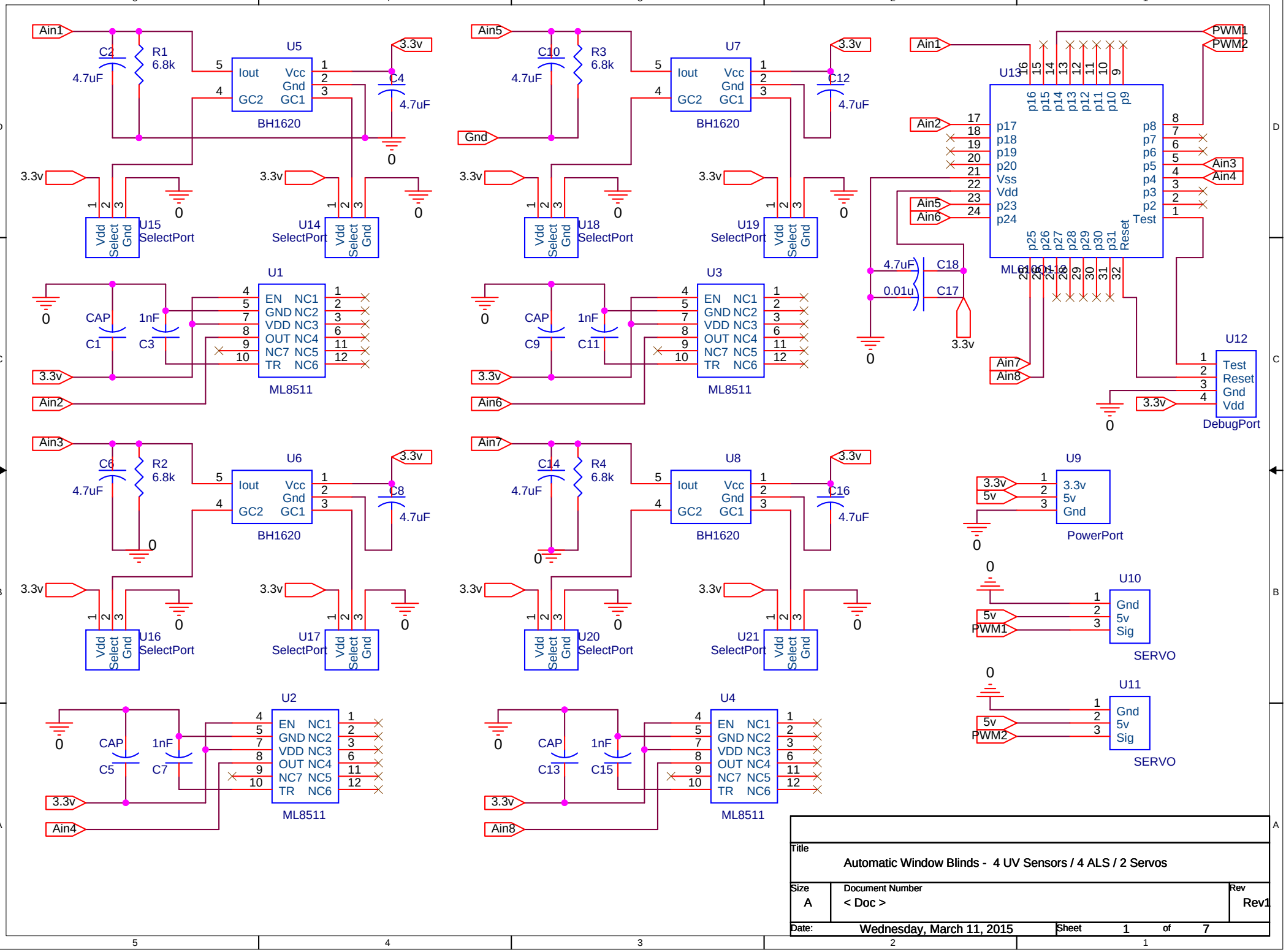

Title	Automatic Window Blinds - 4 UV Sensors / 4 ALS / 2 Servos
Size: A	Document Number: < Doc >
Rev: Rev1	
Date: Wednesday, March 11, 2015	Sheet 1 of 7