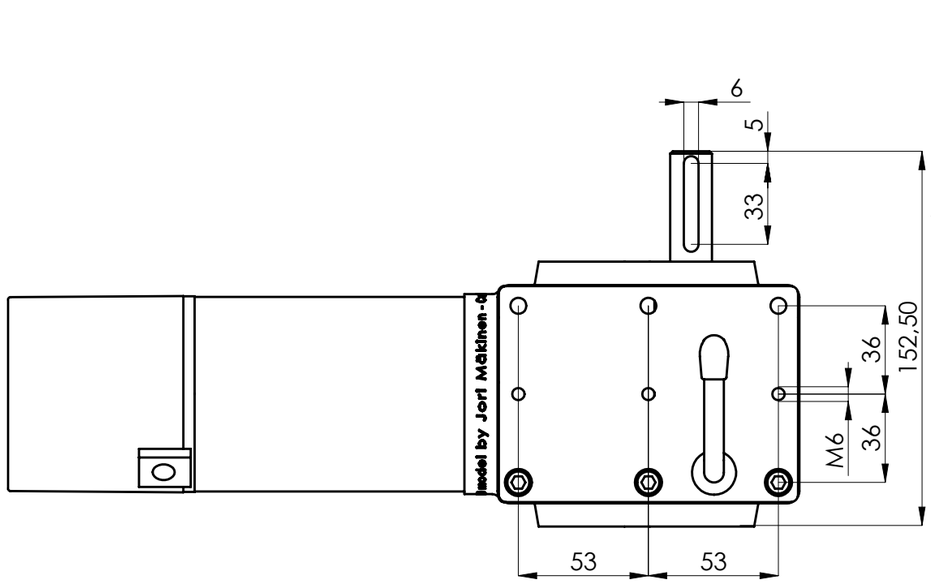

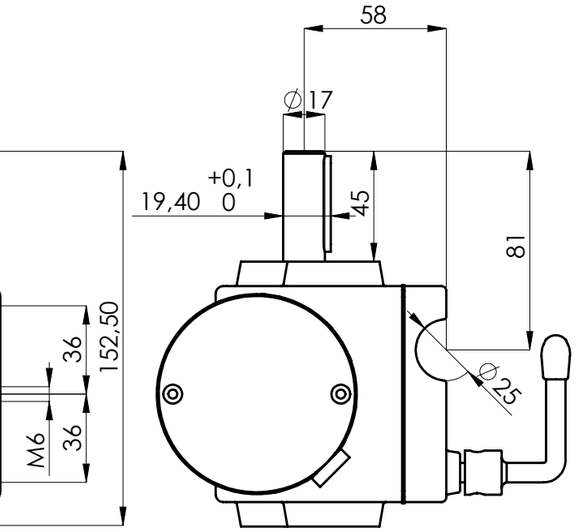

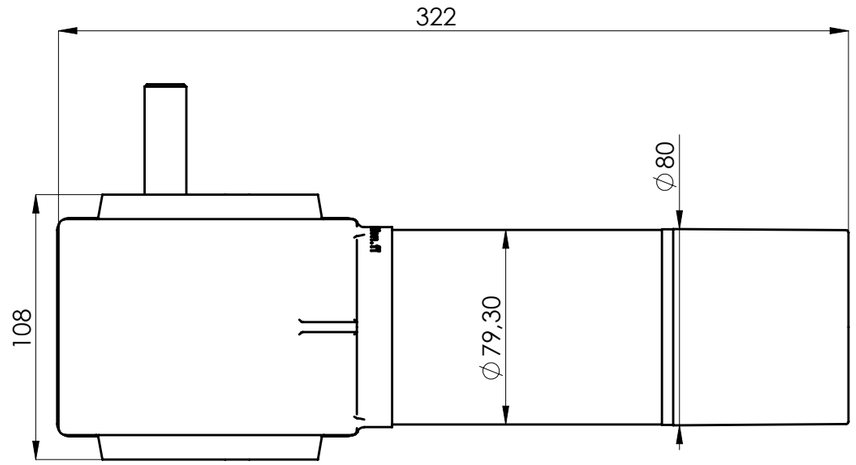

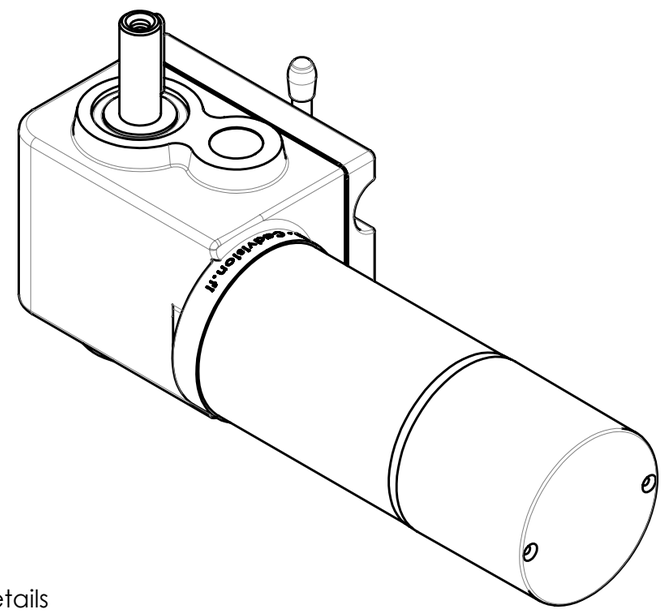

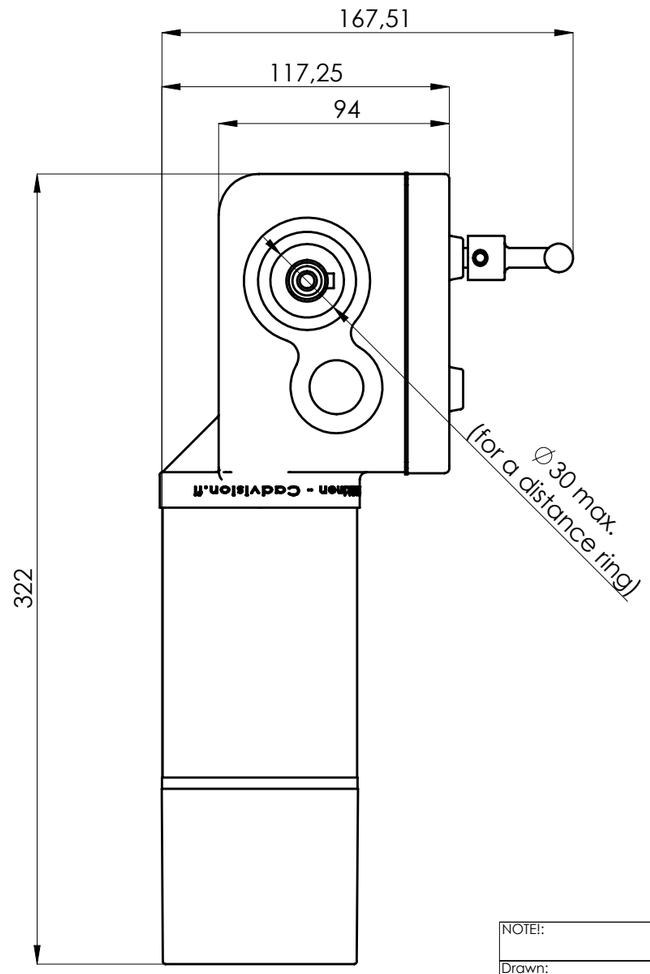

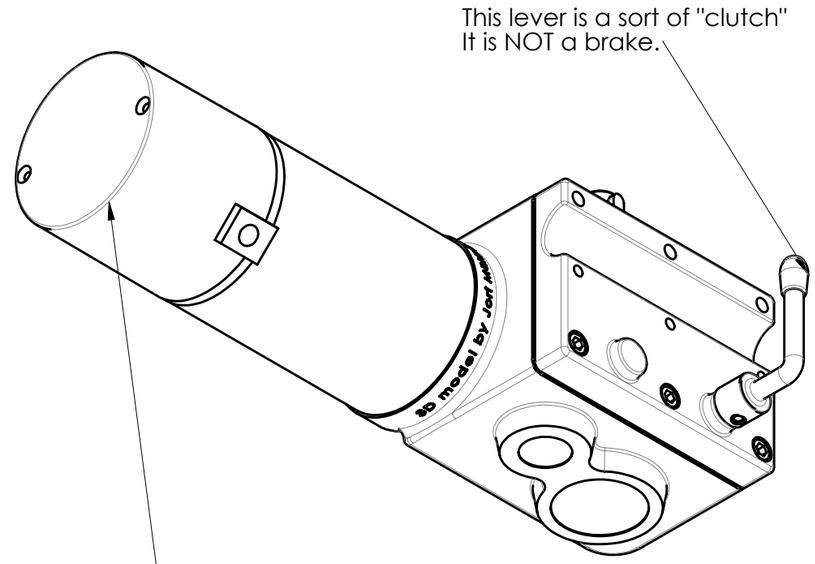

Quick Details

Place of Origin: Guizhou, China (Mainland)
Brand Name: AVIC
Model Number: DG-M168A
Usage: electric wheelchair
Type: Gear Motor
Construction: Permanent Magnet
Commutation: Brush
Speed(RPM): 135RPM
Output Power: 150W, 150W
Voltage(V): 24VDC
Factory: produce motor by INVARE in USA, DYNAMIC in New Zealand
Application: specially use for electric wheelchair / scotter
Operating Voltage: 24V DC
Motor Speed±5%(RPM): 3600
No-load Output Speed: 135 RPM
Gear ratio: 26.25:1
Gearmotor Rated Torque: 11.3 Nm
Brake Torque: ≥39.5 Nm

NOTE!:	Tolerance:	Standard:	Material:	Dim:	Coating:	Weight: 4.63 kg
Drawn: J.Mäkinen	Use ISO 2768-mK if no other above mentioned		Description Motor DG-168A2 assembly			
Design: J.Mäkinen	Angular misaligment of the shorter shank / Nominal measure / ISO 2768-mK Tolerances					
Check:	Over / Max /	Over / Max /	Draw.No. 0473		Rev. / Date / 12.4.2015	
CADVISION +358 45 6760311 www.cadvision.fi jori@cadvision.fi	0 / 10 / ±1°	0 / 3 / ±0,1				
	10 / 50 / ±30´	3 / 6 / ±0,1	Configuration: Default		Related to:	
	50 / 120 / ±20´	6 / 30 / ±0,2				
	120 / 400 / ±10´	30 / 120 / ±0,3	Spare part no:		Product:	
Scale 1:2.5	DIN ISO 5456	120 / 400 / ±0,5	File / Save date: 0473 - Motor DG-168A2 assembly / 12.4.2015 12:29:42			
		400 / 1000 / ±0,8				