Structure-Dependent Recoverability and Failure Modes in Projection-Based Correction Systems

Steven Reid Independent Researcher ORCID: 0009-0003-9132-3410 sreid1118@gmail.com April 2026

Abstract

Projection-based correction is often treated as a generic recipe: reduce a constraint violation (for example, divergence) and infer full state recovery. This paper isolates where that inference is valid and where it fails in an explicit, tested setting. We contrast a periodic exact-projection lane with a bounded-domain transplant-failure lane, then classify outcomes as exact, asymptotic-only, or impossible under declared structural assumptions. The central result is architectural: exactness depends on compatibility between protected structure, domain class, and correction operator. Divergence reduction alone is not an exactness certificate on bounded classes. Scope is intentionally non-universal.

Keywords: projection methods, Helmholtz-Hodge decomposition, incompressible flow, bounded-domain obstruction, recoverability, structural mismatch

1. Introduction

Projection methods are central in incompressible-flow computation and many correction architectures. Yet practical usage often slides between two different claims:

• a numerical claim (“divergence gets smaller”), and
• a structural claim (“the protected state is exactly recovered”).
These claims coincide only under specific structural conditions. This paper develops a minimal comparative framework that keeps this distinction explicit.

This manuscript is intentionally bridge-scoped: it applies projection/correction structure in PDE-style settings. For the abstract restricted-linear recoverability theorem package, see papers/recoverability_paper_final.md; for the compact operator-foundation companion, see papers/ocp_core_paper.md.

1.1 Contributions and Status Labels

• PROVED (periodic success lane): periodic-compatible projection recovers the protected component exactly on the supported benchmark class.
• PROVED (bounded failure lane): naive periodic-to-bounded transplant can reduce divergence while still failing exact protected recovery.
• PROVED (mechanism): boundary-structure mismatch explains divergence-reduction/ recovery-decoupling in the transplant lane.
• PROVED (restricted positive bounded result): exact bounded recovery survives on an explicit boundary-compatible family.
• VALIDATED/INTERPRETATION: classification and design consequences are reported with explicit evidence labels and scope.

2. Setup and Minimal Correction Framework

Let

• x denote the full state,
• x_p the protected component (e.g., boundary-compatible incompressible component),
• x_d disturbance/contamination (e.g., gradient contamination or incompatible boundary component),
• C a correction operator.
We call C:

• exact if $C(x_p + x_d) = x_p$ on the declared family,
• asymptotic if repeated/continuous correction reduces defect but does not produce finite-step exactness,
• impossible if no operator in the stated architecture can recover x_p exactly.

3. Exact Success Case: Periodic Projection

Theorem 3.1 (Periodic exact projection anchor)

On the implemented periodic family, Helmholtz/Leray projection exactly recovers the divergence-free protected component and is idempotent on that class.

Status: PROVED (CFD-T1).

Theorem 3.2 (Periodic vorticity-to-velocity exactness)

On the implemented periodic mean-zero streamfunction family, vorticity inversion determines velocity exactly.

Status: PROVED (CFD-T2).

4. Failure Case: Bounded-Domain Transplant

Theorem 4.1 (Naive periodic projector transplant failure)

Applying the periodic projection architecture to the bounded benchmark can drive divergence near zero while still violating the physically admissible boundary class.

Status: PROVED on the benchmark counterexample (CFD-N2 / proof-status map).

Theorem 4.2 (Divergence-only insufficiency)

Distinct bounded-domain velocity fields can share identical divergence data; therefore divergence-only records do not determine the protected bounded velocity state.

Status: PROVED (CFD-T4 / CFD-N1).

5. Mechanism: Why Divergence Removal Is Not Enough

The failure mechanism is structural mismatch:

• protected class on bounded domains encodes boundary-compatible geometry,
• a periodic projector enforces the wrong decomposition for that boundary class,
• therefore “constraint reduced” does not imply “target recovered.”
This is not an implementation bug; it is an architecture mismatch.

5.1 Boundary-Structure Mismatch in Operator Terms

Write the bounded protected class as

V_prot = { u : ∇·u=0, u satisfies declared boundary class }.

The bounded-domain exactness question is whether the correction operator satisfies

C|_{V_prot} = I and C(v_prot + d) = v_prot on the declared admissible disturbance family.

In the transplant failure lane, the imported periodic projector controls a divergence component but does not enforce the bounded boundary trace structure defining V_prot. This creates persistent same-divergence/different-state collisions, so exact bounded recovery fails even when divergence is numerically small.

Figure 1 demonstrates this directly: periodic and bounded-transplant lanes can show similarly strong post-correction divergence reduction, while recovery error remains near zero only in the periodic-compatible lane.

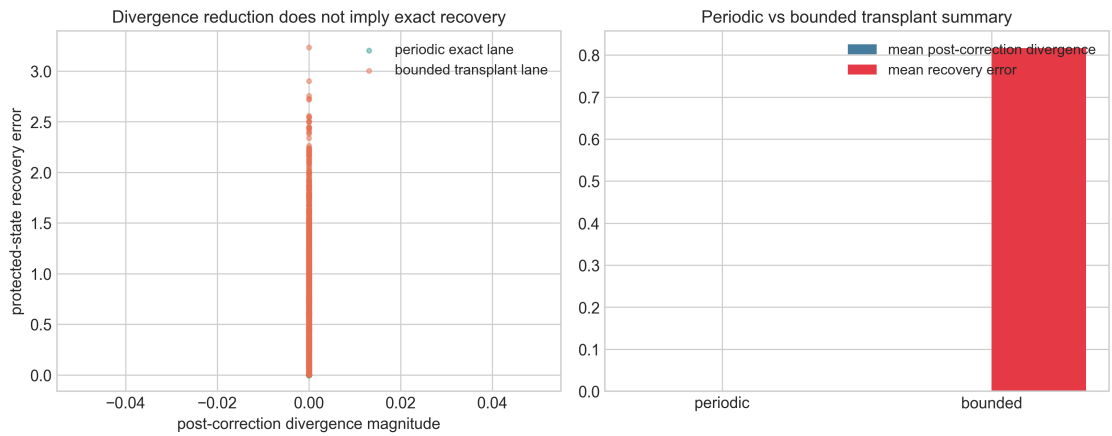

Figure 1. Divergence reduction versus actual protected-state recovery for periodic and bounded-transplant correction operators.

Figure 1. Divergence reduction versus actual protected-state recovery for periodic and bounded-transplant correction operators.

6. Restricted Positive Bounded Result

Theorem 6.1 (Restricted bounded-domain Hodge exactness)

On an explicit boundary-compatible streamfunction family, the orthogonal projector onto the protected span recovers the protected component exactly.

Status: PROVED on explicit family (CFD-T3).

This theorem is intentionally restricted and should not be inflated into full bounded-domain exact classification.

7. Classification in the Tested Structural Setting

| Lane | Verdict | Status | Scope | | --- | --- | --- | --- | | Periodic Helmholtz/Leray projection | exact | PROVED | implemented periodic family | | Periodic vorticity inversion | exact | PROVED | mean-zero periodic family | |

Bounded periodic-projector transplant | impossible as exact recovery | PROVED (counterexample) | benchmark bounded family | | Divergence-only bounded recovery | impossible as exact classifier | PROVED | bounded witness class | | GLM/damping-style correction | asymptotic-only | VALIDATED | tested benchmark lane | | Broader bounded exact classification | open | OPEN | outside current theorem spine |

8. Comparison and Design Consequences

8.1 Exact vs impossible comparison

• Exact periodic lane: decomposition and protected class are aligned.
• Bounded transplant lane: decomposition and protected class are misaligned.

8.2 Periodic vs Bounded vs GLM Comparison

| Lane | Protected object | Correction mechanism | Boundary compatibility role | Divergence behavior | Exactness verdict | | --- | --- | --- | --- | --- | --- | | periodic projection | periodic divergence-free component | Helmholtz/Leray projector | built into periodic decomposition | projected to zero in one step | exact (PROVED) | | bounded transplant (naive periodic operator) | bounded boundary-compatible divergence-free component | imported periodic-style projection | mismatched to bounded trace class | can be reduced strongly | impossible as exact recovery (PROVED counterexample) | | GLM/damping-style lane | constraint-violation component decays over time | hyperbolic/parabolic cleaning dynamics | architecture-dependent; not a one-step projector | decays asymptotically | asymptotic-only (VALIDATED) |

Figure 2 visualizes one representative state under exact and failed projection architectures. Figure 3 summarizes the protected/disturbance/correction flow with computed aggregate error labels.

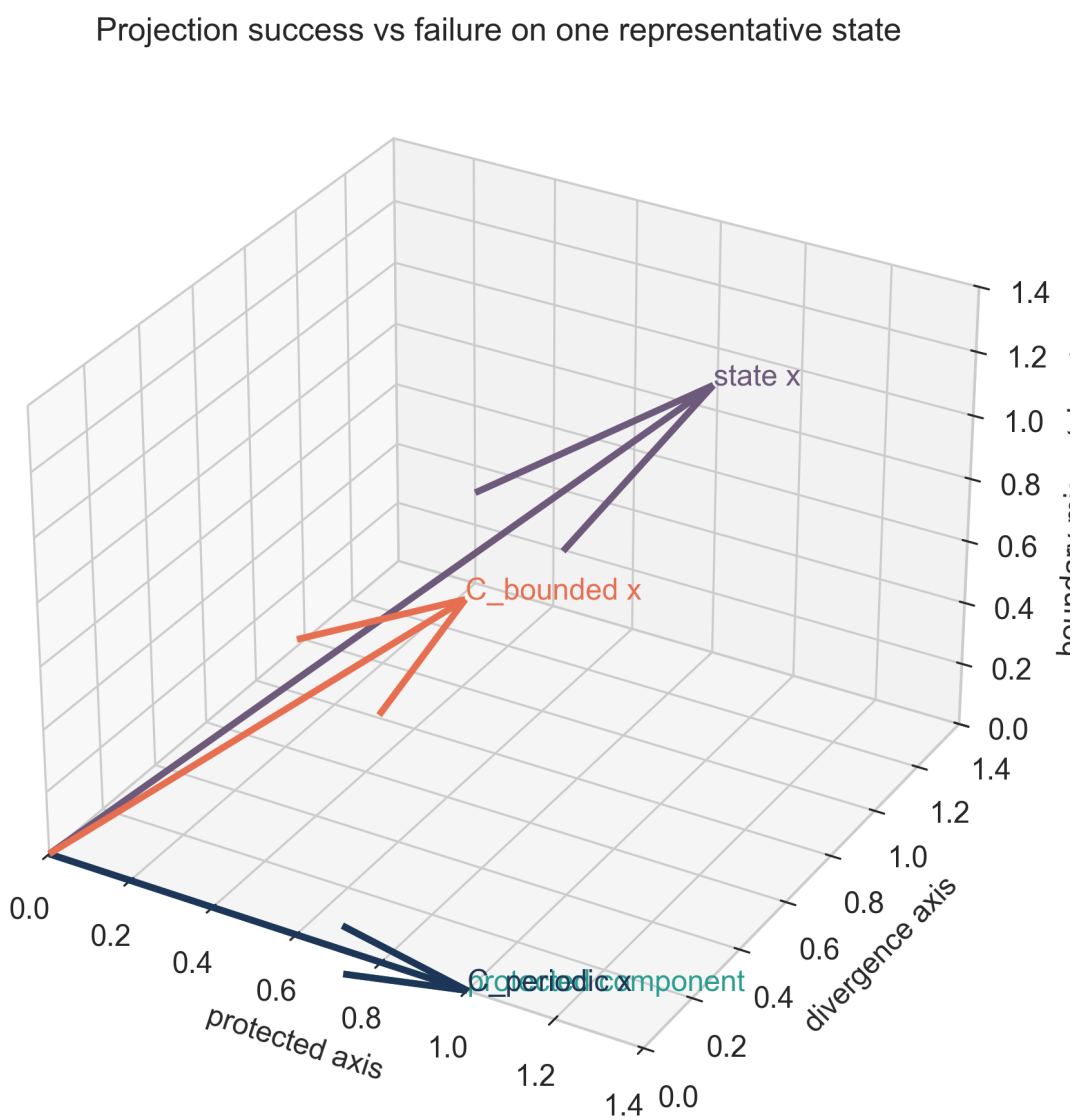

Figure 2. Projection success versus failure in state space: periodic-compatible projector returns the protected component, while bounded transplant retains boundary-mismatch content.

Figure 2. Projection success versus failure in state space: periodic-compatible projector returns the protected component, while bounded transplant retains boundary-mismatch content.

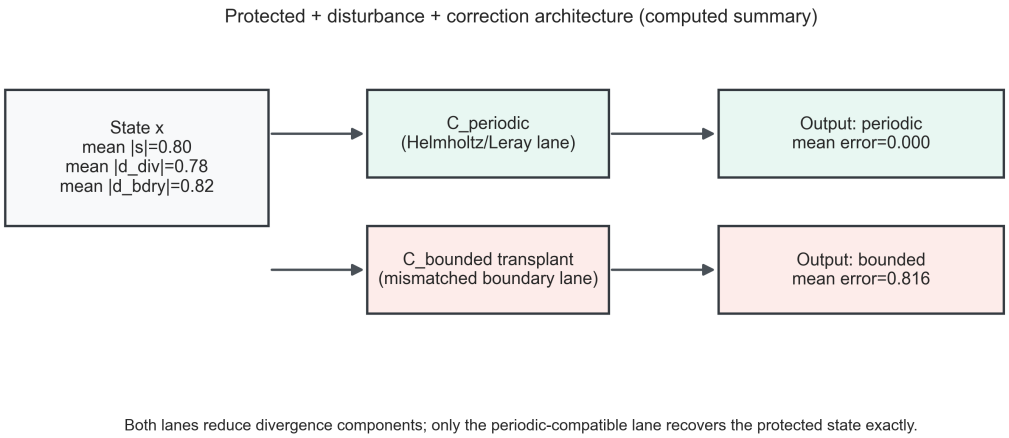

Figure 3. Protected component, disturbance components, and correction-operator flow with computed mean errors.

Figure 3. Protected component, disturbance components, and correction-operator flow with computed mean errors.

8.3 Practical design rule

Correction architecture should be selected from the protected class and domain geometry first, then optimized numerically. Reversing that order (optimizer first, structure later) risks false exactness conclusions.

9. Relation to Existing Projection Literature

Classical and modern projection-method literature emphasizes pressure/projection mechanics and computational efficiency. The contribution here is a recoverability-focused contrast: same broad method family, opposite exactness verdicts under domain-structure change.

9.1 Position Relative to Existing Work

The periodic and bounded decomposition ingredients are well-established in CFD, projection-method, and Hodge/Helmholtz literature. The contribution here is narrower and operational: an explicit recoverability-centered contrast showing how the same broad correction family can produce opposite exactness outcomes when boundary-structure compatibility changes. The likely distinctive element is this status-disciplined exact/asymptotic/impossible comparison in one declared benchmark setting, not a new universal PDE theorem.

10. Limitations and Scope

• This is a bridge paper, not a universal PDE theory.
• Results are theorem-level only on implemented/restricted families.
• Asymptotic branches are validated benchmarks, not exact finite-time theorems.
• Turbulence-wide and full Navier–Stokes universality are out of scope.

11. Conclusion

Projection methods are structurally powerful but not context-free. The periodic exact lane and bounded transplant failure lane together show that recoverability is architecture-dependent: boundary-compatible protected structure must match correction design. This gives a disciplined bridge from abstract recoverability language to practical CFD-style correction systems without claiming universal unification.

12. Administrative Statements

12.1 Funding

This research received no external funding.

12.2 AI Usage Statement

Generative AI tools were used for code generation, refactoring assistance, testing support, visualization scripting, and drafting assistance. Mathematical claims, derivations, validation logic, and final content were reviewed and verified by the author.

12.3 Data and Code Availability

Public repository for this bridge paper release: https://github.com/RRG314/Protected-State-Correction-Theory. Companion CFD program materials may also exist in local or companion repositories; only publicly reachable assets are cited here.

12.4 Conflict of Interest

The author declares no conflict of interest.

12.5 Reproducibility Note

Figures in this manuscript are generated and checked via:

• python scripts/figures/generate_publication_figures.py
• python scripts/figures/validate_publication_figures.py
The metrics and validation outputs are stored under data/generated/figures/.

13. References

• A. J. Chorin, “Numerical solution of the Navier–Stokes equations,” Mathematics of Computation, 22(104) (1968), 745–762. DOI: 10.1090/S0025-5718-1968-0242392-2.
• D. L. Brown, R. Cortez, and M. L. Minion, “Accurate projection methods for the incompressible Navier–Stokes equations,” Journal of Computational Physics, 168(2) (2001), 464–499. DOI: 10.1006/jcph.2001.6715.
• J.-L. Guermond, P. Minev, and J. Shen, “An overview of projection methods for incompressible flows,” Computer Methods in Applied Mechanics and Engineering, 195(44–47) (2006), 6011–6045. DOI: 10.1016/j.cma.2005.10.010.

• R. Temam, Navier–Stokes Equations: Theory and Numerical Analysis, AMS Chelsea, Providence, RI, 2001.
• V. Girault and P.-A. Raviart, Finite Element Methods for Navier–Stokes Equations: Theory and Algorithms, Springer, Berlin, 1986. DOI: 10.1007/978-3-642-61623-5.
• A. Dedner, F. Kemm, D. Kröner, C.-D. Munz, T. Schnitzer, and M. Wesenberg, “Hyperbolic divergence cleaning for the MHD equations,” Journal of Computational Physics, 175(2) (2002), 645–673. DOI: 10.1006/jcph.2001.6961.

14. Appendix A. Status Labels

• PROVED: theorem-level in stated family/scope.
• VALIDATED: reproducible benchmark confirmation.
• CONDITIONAL: requires explicit additional assumptions.
• OPEN: unresolved.
• INTERPRETATION: explanatory only.