Seminar Report

MD-Bench CUDA Port

MuCoSim Seminar

Author: Maximilian Gaul

Date: February 17, 2022

Instructor: Dr. Jan Eitzinger

Supervisor: Rafael Ravedutti

Contents

1 Project Description **3**
1.1 Application Info 3
1.2 Testsystem 5
1.3 Software Environment 6
1.4 How to build software 6
1.5 Testcase description 7
1.6 How to run software 7

2 Scaling Runs **9**
2.1 CUDA Programming Model 9
2.2 CUDA Kernels 10
2.3 NVIDIA Tools 10
2.4 GPU Baseline 11
2.5 Improvement I: Pinnend memory 12

Project Description

Application Info

MD-Bench is a molecular dynamics application which calculates interactions among particles and how these affect their motion. The simulation system consists of

- number of atoms (with initial state such as position & velocity)
- boundary conditions for 3D space

The force of each atom is based on its accumulated interactions with neighboring atoms. In particular, MD-Bench uses the *Lennard-Jones* potential to model the potential energy among pairs of particles. The model is able to represent attractive as well as repulsive energies.

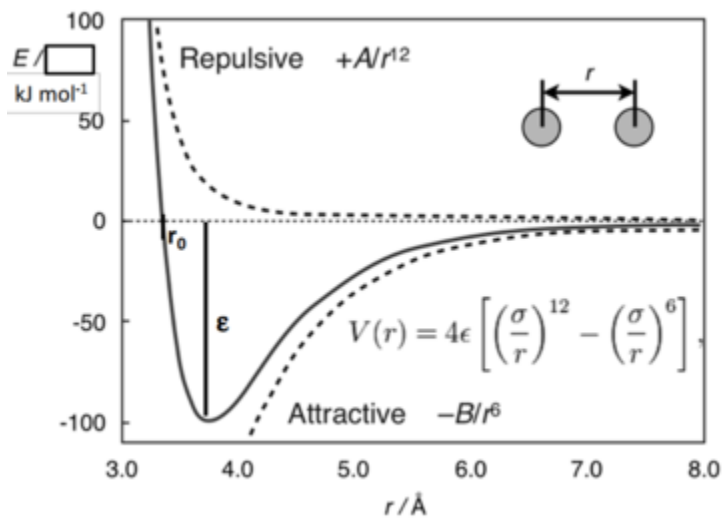

Figure 1.1: Lennard-Jones potential with the distance between two atoms in Ångström on the x-axis

In figure 1.1 the potential energy in relation to the distance between two atoms is depicted. The formula of the potential consists of three parameters, namely:

- r: distance between two interacting atoms
- ϵ: dispersion energy
- σ: distance at which the particle-potential V is zero

The figure shows that the Lennard-Jones potential is a simplified model but still describes the essential aspects of particle dynamics. Furthermore, particles repel each other at close, attract at medium and have negligible interactions at large distances.

MD-Bench is publicly available on GitHub via the URL `https://github.com/RRZE-HPC/MD-Bench`.

The main focus of this report is to port the main functions in *force.c* to the CUDA programming model and evaluate the performance with respect to the adapted code, which is available under the branch *mucosim-cuda*.

Calculating the Lennard-Jones potential, updating the atom forces as well as positions is done in a main-loop for each time step:

```
for t in range(timesteps):
    for atom in atoms:
        neighbors = neighbor.neighbors[atom]
        force = 0.0
        for neighbor in neighbors:
            radius = calc_radius(...)
            if radius < close_enough:
                force += calc_force(...)
        forces[atom] += force
    update_velocity(atoms)
    update_position(atoms)
    if t % 20 == 0:
        reneighbour_atoms(atoms)
```

Figure 1.2: Pseudocode of the main-loop of MD-Bench

Testsystem

Most of the upcomming performance measurements were performed on:

- Host/Clustername: tg060-tg06b (tinyGPU)
- Cluster Info URL: `https://hpc.fau.de/systems-services/systems-documentation-instructions/clusters/tinygpu-cluster/`
- CPU type: 2x Intel Xeon Gold 6134 ("Skylake") @ 3.2 GHz
- GPU type: 4x NVIDIA RTX 2080 Ti (11 GB memory)
- Memory: 96GB RAM

Towards the end there are metric evaluations which were performed on:

- Host/Clustername: tg090-tg097 (tinyGPU)
- Cluster Info URL: `https://hpc.fau.de/systems-services/systems-documentation-instructions/clusters/tinygpu-cluster/`
- CPU type: 2x AMD Rome 7662 @ 2.0 GHz
- GPU type: 4x NVIDIA A100 SXM4/Nvlink (40GB memory)
- Memory: 512GB RAM

To access either one of the nodes, one have to first connect to `woody.rrze.fau.de` and then execute

- srun.tinygpu -N 1 -n 1 –gres=gpu:rtx2080ti:1 –pty /bin/bash -l
- srun.tinygpu -N 1 -n 1 –partition=a100 –gres=gpu:a100:1 –pty /bin/bash -l

respectively.

Software Environment

The software is compiled with

- Cuda compilation tools, release 11.2, V11.2.152
- Build cuda_11.2.r11.2/compiler.29618528_0

on the Operating System Ubuntu 20.04.3 LTS.

How to build software

After connecting to woody.rrze.fau.de, the following commands need to be executed to clone to repository

```
foo@bar:~$ git clone https://github.com/RRZE-HPC/MD-Bench↘
    /tree/mucosim_cuda
foo@bar:~$ cd MD-Bench
foo@bar:MD-Bench$ git checkout mucosim_cuda
```

Figure 1.3: Cloning the repository

Then, the TAG-variable in config.mk needs to be changed to TAG ?= NVCC to use the Nvidia CUDA compiler. Compiler flags can be adjusted in include_NVCC.mk. For compiling the code, one has to first connect to a GPU cluster, in this case, either *tinyGPU.tg060-tg06b* or *tinyGPU.tg090-tg097* and then execute:

```
foo@bar:MD-Bench$ module load likwid cuda
foo@bar:MD-Bench$ make
```

Figure 1.4: Compiling the code

This should produce an executable MDBench-NVCC.

Testcase description

This report will focus on the standard configuration of MD-Bench, this means *131072* atoms and *Lennard-Jones* potential for the force field. Only the amount of time steps is modified. For performance tests, 2000 time steps on a RTX 2080 Ti are used. Due to the high measurement time, this value has been reduced to 200 for the metric evaluations, which are done on an A100.

How to run software

MD-Bench has the following command line parameters:

```
foo@bar:MD-Bench$ ./MDBench-NVCC -h
MD Bench: A minimalistic re-implementation of miniMD
-----------------------------------------------------
-f <string>:            force field (lj or eam), default lj
-i <string>:            input file for EAM
-n / --nsteps <int>:    set number of timesteps for ↘
   simulation
-nx/-ny/-nz <int>:      set linear dimension of systembox ↘
   in x/y/z direction
--freq <real>:          processor frequency (GHz)
--vtk <string>:         VTK file for visualization
-----------------------------------------------------
```

Figure 1.5: MD-Bench command line parameters

Running the previously generated executable should produce the following output

```
foo@bar:MD-Bench$ ./MDBench-NVCC
step     temp            pressure
0        1.440000e+00    1.215639e+00
100      8.200895e-01    6.923143e-01
200      7.961495e-01    6.721043e-01
---------------------------------------------------------
Force field: lj
Data layout for positions: AoS
Using double precision floating point.
---------------------------------------------------------
System: 131072 atoms 47265 ghost atoms, Steps: 200
TOTAL 6.83s FORCE 0.73s NEIGH 3.07s REST 3.04s
---------------------------------------------------------
Performance: 3.84 million atom updates per second
```

Figure 1.6: MD-Bench output

Scaling Runs

CUDA Programming Model

In order to scale the MD-Bench code efficiently on Nvidia GPUs, knowledge about the CUDA programming model is necessary.

The basic execution size is a *thread* which is executed by one CUDA core. Typical state-of-the art GPUs have 4352 (RTX 2080 Ti) and up to 6912 (A100) CUDA cores.

Threads are grouped together as *blocks*, these are then executed on Streaming Multiprocessors (*SM*). Resources on an SM are allocated on a *warp*-size level (multiple of 32 threads and up to 1024) and dispatched to execution units of the GPU.

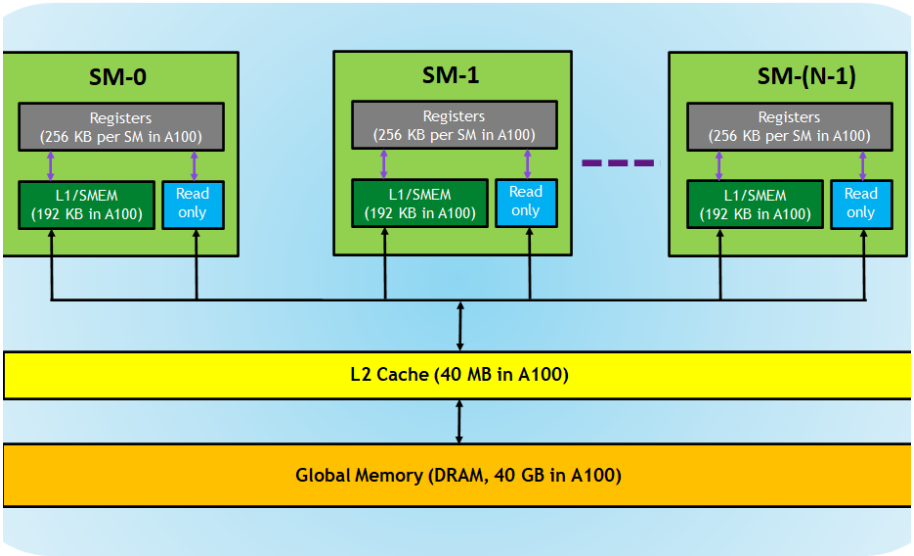

Figure 2.1: Memory hierarchy in GPUs

Figure 2.1 shows the memory architectur of Nvidia GPUs such as the A100. It consists of

- Registers: Owned by a thread, not visible to other threads
- L1/Shared memory (SMEM): Each SM has a versatile memory which can be used as L1 cache or as shared memory among all threads in a CUDA block. Size ranges from 64KB per SM (RTX 2080 Ti) to 192KB per SM (A100).
- Read-only memory: Each SM has an instruction cache as well as other kinds of memory which can be used for graphics applications.
- L2 cache: Shared across all SMs which means that every CUDA block can access this memory. Typical sizes are 5.5MB (RTX 2080 Ti) and up to 40MB (A100).

CUDA Kernels

In order to scale performance with available CUDA cores, the code is parallelized on an atom-level. For 131072 atoms, this means there are 131072 threads and 131702 / num_threads_per_block number of blocks, where performance is evaluated for num_threads_per_block $\in \{1, 2, 4, 8, 16, 32, 64\}$. Each thread is going to execute the same *CUDA kernel* function in parallel on the GPU. In the context of MD-Bench, the kernel function calculates the 3D force for a single atom with respect to its neighbour-atoms.

Before the execution can happen, memory has to be copied from host (CPU) to device (GPU). This means the neighbour list as well as position data for each atom and Lennard-Jones potential parameters. The kernel-code writes the resulting forces into GPU memory which is copied back to the host after calculation is finished in order to proceed with other functions that are still running on CPU.

Inside the kernel function there is a precise way to tell which thread is currently executed. The CUDA programming model supplies the parameters blockIdx.x, blockDim.x and threadIdx.x. A combination of these parameters can be used as an index into the atom- and force-arrays.

NVIDIA Tools

NVIDIA supplies a range of tools to evaluate performance of code running on the GPU. nvprof is able to record memory transfers from and to the device. This helps with evaluating memory bottlenecks.

Furthermore, *NVIDIA Nsigh Compute* is available as a command line tool ncu and for the desktop. It captures a vide variety of performance parameters, some of them will be displayed in the metric evaluation section.

GPU Baseline

For an initial performance baseline, the MD-Bench computeForce function is refactored *as-is* to support force calculation in parallel using a CUDA kernel.

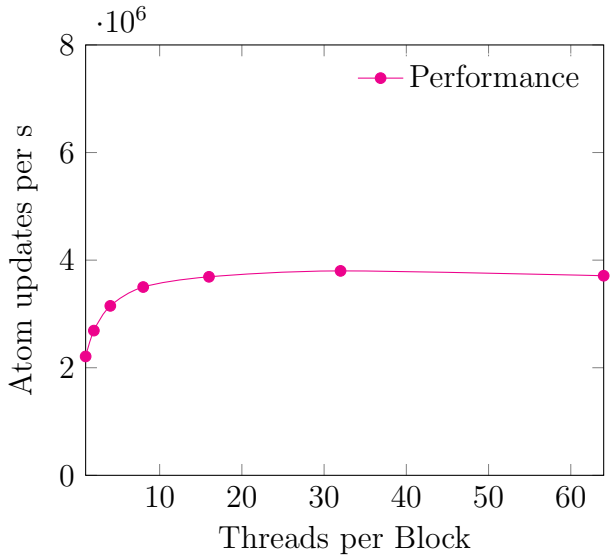

Figure 2.2: GPU baseline performance, RTX 2080 Ti

Using nvprof ––print–gpu–trace ./MDBench–NVCC yields an overview of memory transfers between host and device:

Duration	Size	Throughput	SrcMemType	DstMemType	Name	Type
899.68us	4.1199MB	4.4719GB/s	Pageable	Device	[CUDA memcpy HtoD]	atom.x
87.904us	1.0000MB	11.109GB/s	Pageable	Device	[CUDA memcpy HtoD]	atom.fx
87.616us	1.0000MB	11.146GB/s	Pageable	Device	[CUDA memcpy HtoD]	atom.fy
87.808us	1.0000MB	11.122GB/s	Pageable	Device	[CUDA memcpy HtoD]	atom.fz
60.640us	703.13KB	11.058GB/s	Pageable	Device	[CUDA memcpy HtoD]	atom.type
896ns	128B	136.24MB/s	Pageable	Device	[CUDA memcpy HtoD]	LJ ϵ
864ns	128B	141.29MB/s	Pageable	Device	[CUDA memcpy HtoD]	LJ σ
864ns	128B	141.29MB/s	Pageable	Device	[CUDA memcpy HtoD]	threshold
11.534ms	50.000MB	4.2335GB/s	Pageable	Device	[CUDA memcpy HtoD]	neighbour
45.248us	512.00KB	10.791GB/s	Pageable	Device	[CUDA memcpy HtoD]	numneigh
19.917ms	-	-	-	-	calcforce() [132]	-
80.896us	1.0000MB	12.072GB/s	Device	Pageable	[CUDA memcpy DtoH]	atom.fx
80.736us	1.0000MB	12.096GB/s	Device	Pageable	[CUDA memcpy DtoH]	atom.fy
80.480us	1.0000MB	12.134GB/s	Device	Pageable	[CUDA memcpy DtoH]	atom.fz

Table 2.1: Memory transfers for GPU baseline

Table 2.1 shows that the performance depicted in figure 2.2 is severely limited due to memory bottlenecks. Because of that, the main goal is to remove as many memory transfers as possible.

Improvement I: Pinnend memory

As a first performance improvement, memory allocations on the host are changed from regular malloc and free to their respective CUDA versions cudaMallocHost and cudaFreeHost.

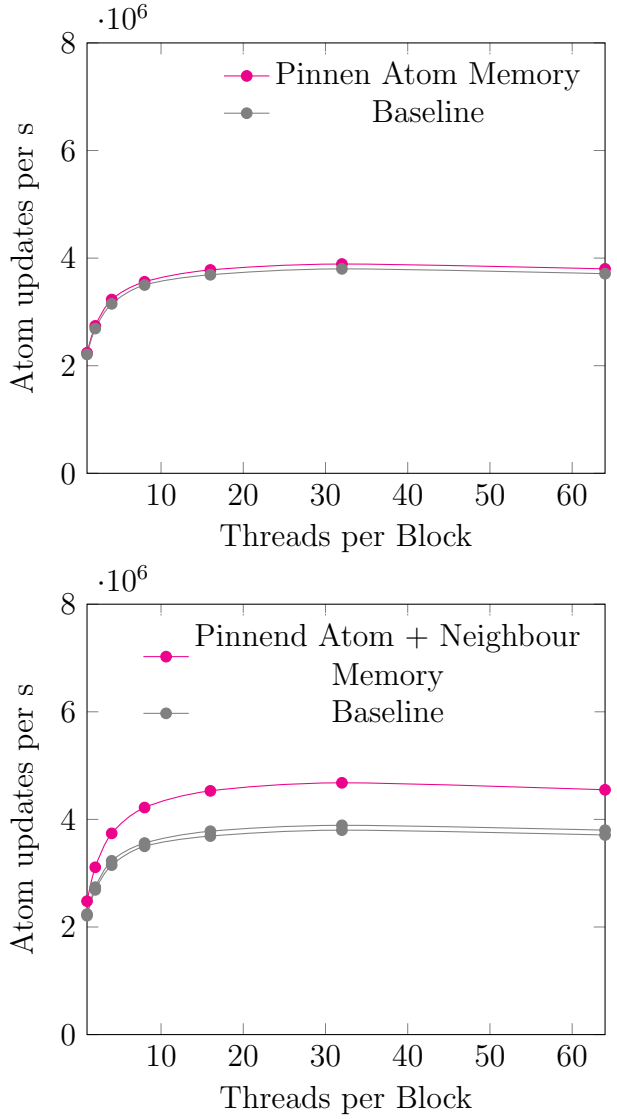

Figure 2.3: Improvement I: Pinnend memory

cudaMallocHost allocates memory on the host that is page-locked an accessible to the device. This means, this memory block is not available for paging and can therefore achieve higher data rates and less access delay.

As shown in figure 2.3, this yields a performance improvement of 23% if all memory is allocated this way, meaning atom as well as neighbour list.

Duration	Size	Throughput	SrcMemType	DstMemType	Name	Type
355.54us	4.1199MB	11.316GB/s	Pinned	Device	[CUDA memcpy HtoD]	atom.x
88.069us	1.0000MB	11.089GB/s	Pinned	Device	[CUDA memcpy HtoD]	atom.fx
87.972us	1.0000MB	11.101GB/s	Pinned	Device	[CUDA memcpy HtoD]	atom.fy
87.844us	1.0000MB	11.117GB/s	Pinned	Device	[CUDA memcpy HtoD]	atom.fz
61.187us	703.13KB	10.959GB/s	Pinned	Device	[CUDA memcpy HtoD]	atom.type
832ns	128B	146.72MB/s	Pinned	Device	[CUDA memcpy HtoD]	LJ ϵ
833ns	128B	146.54MB/s	Pinned	Device	[CUDA memcpy HtoD]	LJ σ
832ns	128B	146.72MB/s	Pinned	Device	[CUDA memcpy HtoD]	threshold
4.2854ms	50.000MB	11.394GB/s	Pinned	Device	[CUDA memcpy HtoD]	neighbour
45.443us	512.00KB	10.745GB/s	Pinned	Device	[CUDA memcpy HtoD]	numneigh
19.880ms	-	-	-	-	calcforce() [294]	-
81.285us	1.0000MB	12.014GB/s	Device	Pinned	[CUDA memcpy DtoH]	atom.fx
80.932us	1.0000MB	12.066GB/s	Device	Pinned	[CUDA memcpy DtoH]	atom.fy
80.868us	1.0000MB	12.076GB/s	Device	Pinned	[CUDA memcpy DtoH]	atom.fz

Table 2.2: Memory transfers for Improvement I

Table 2.2 clearly shows the improved memory throughput by pinnend memory for the atom position, neighbour list and Lennard-Jones parameters.

Bibliography