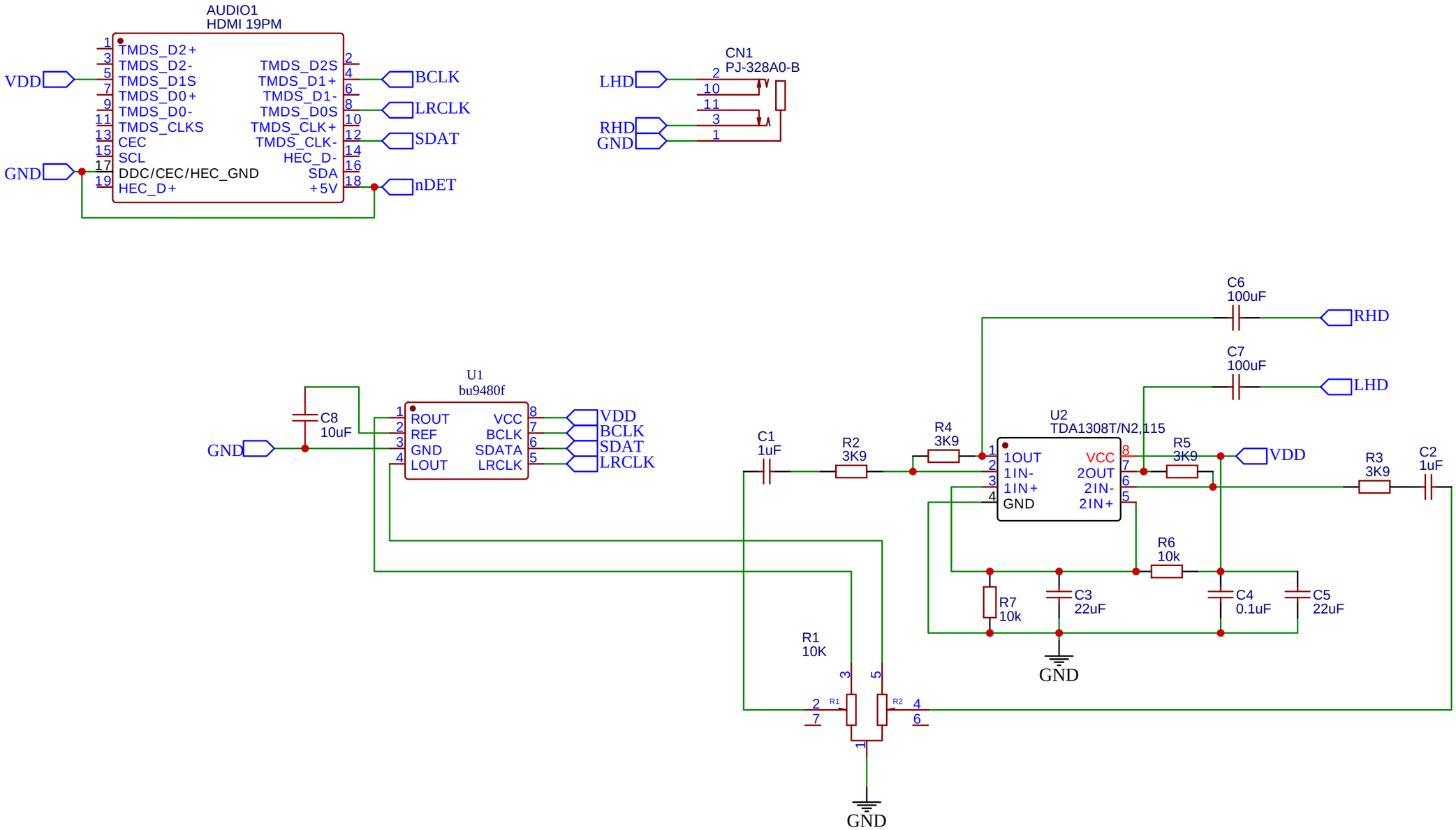

TITLE: WS Headphone		REV: 1.0
	Company:	Sheet: 1/1
	Date: Drawn By:	