RA8D1 Microcontroller

File: RA8D1 Microcontroller.kicad_sch

ART-Link

File: ART-Link.kicad_sch

SDcard&Flash

File: SDcard.kicad_sch

RA8D1 MCU - Power and Clocks

File: RA8D1 MCU - Power and Clocks.kicad_sch

Power

File: power.kicad_sch

Camera Interface

File: Camera Interface.kicad_sch

USB INTERFACE

File: USB INTERFACE.kicad_sch

MIPI LCD DISPLAY INTERFACE

File: MIPI LCD DISPLAY INTERFACE.kicad_sch

SDRAM

File: SDRAM.kicad_sch

WIFI-RW007

File: WIFI-AP6212.kicad_sch

BTB&RPI

File: BTB&RPI.kicad_sch

Vision Board

https://www.rt-thread.org/

RT-Thread 上海睿赛德电子科技有限公司

Sheet: /
File: RA8_main.kicad_sch

Title:

Size: A4	Date:	Rev:
KiCad E.D.A. kicad 7.0.5		Id: 1/12

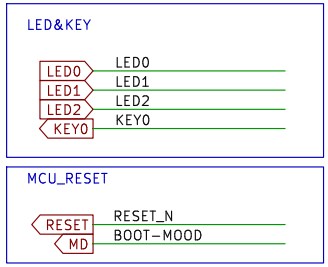

电源供电

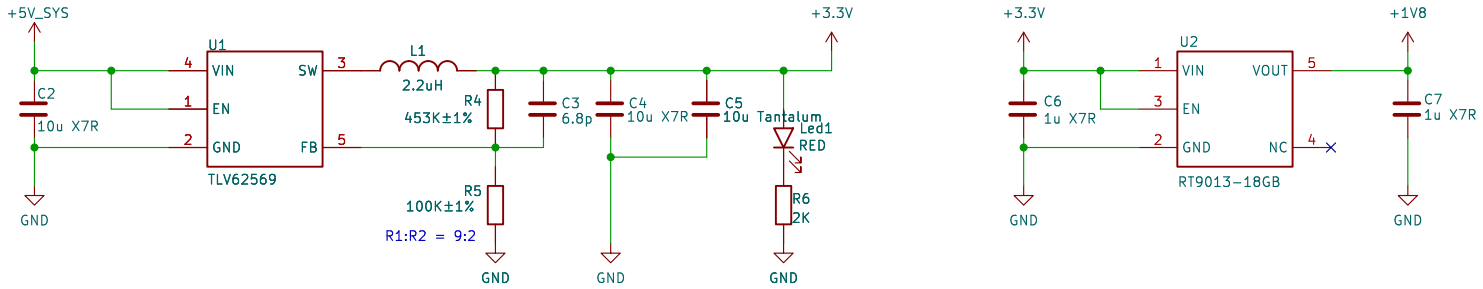

复位电路

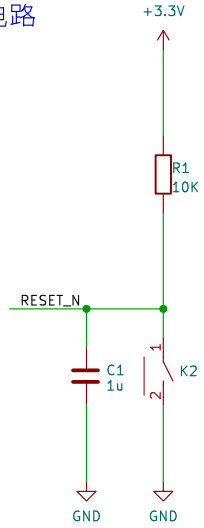

BOOT/用户按键

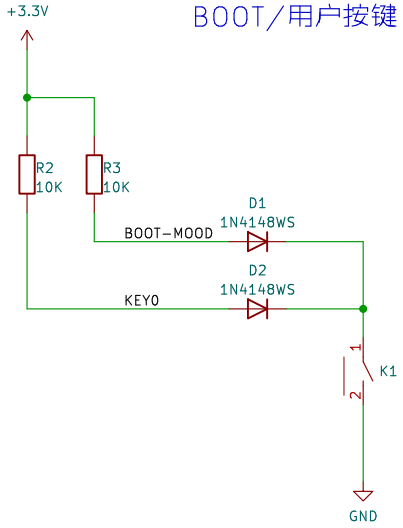

RGB

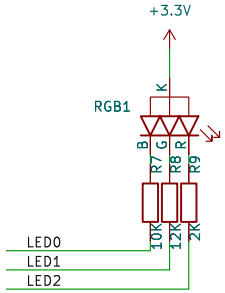

Vision Board

https://www.rt-thread.org/

RT-Thread 上海睿赛德电子科技有限公司

Sheet: /Power/
File: power.kicad_sch

Title:

Size: A4	Date:	Rev:
KiCad E.D.A. kicad 7.0.5		Id: 2/12

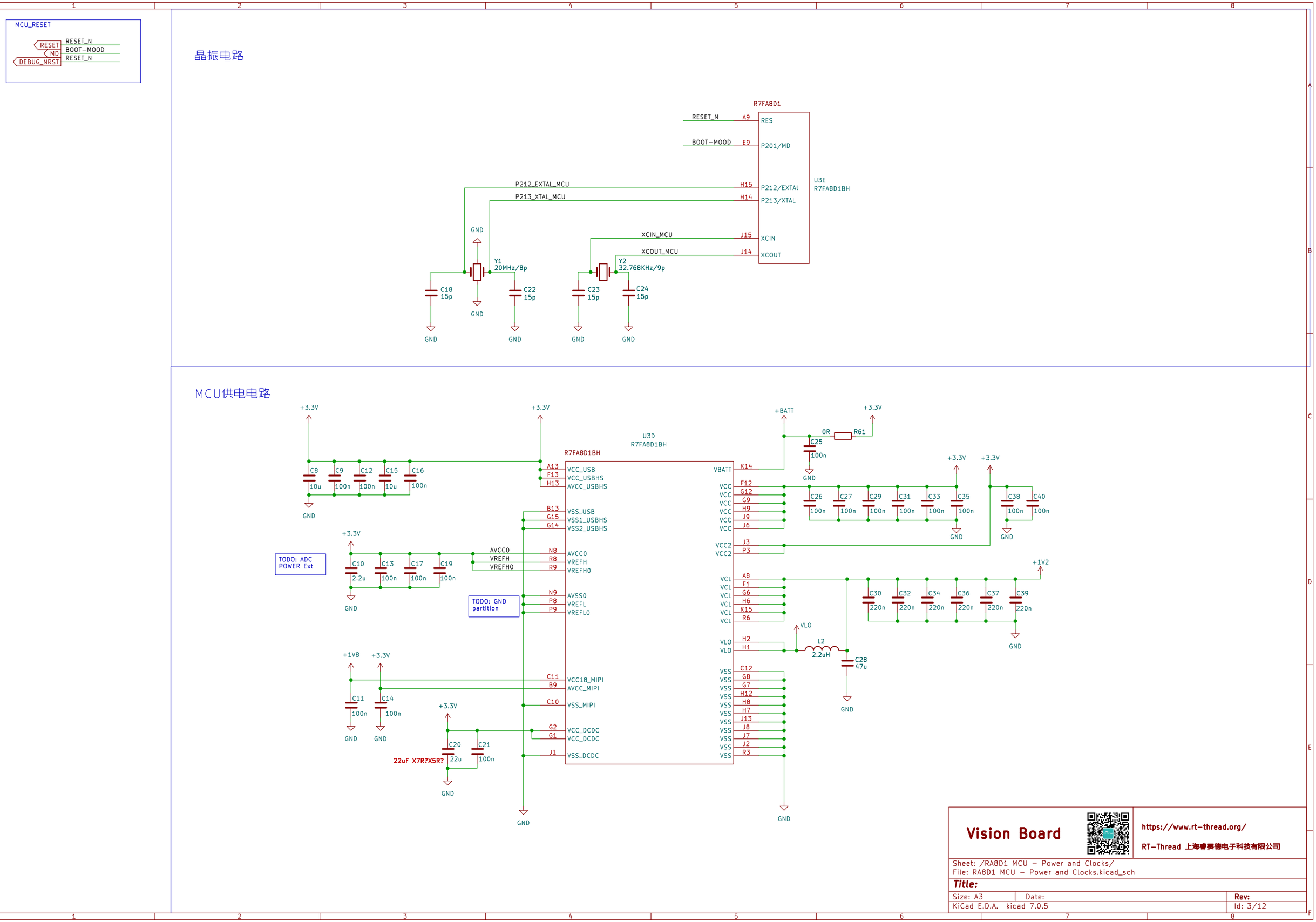
MCU_RESET
RESET
MD
DEBUG_NRST
RESET_N
BOOT-MOOD
RESET_N
晶振电路
R7FA8D1
RESET_N
A9
RES
BOOT-MOOD
E9
P201/MD
P212_EXTAL_MCU
H15
P212/EXTAL
P213_XTAL_MCU
H14
P213/XTAL
U3E
R7FA8D1BH
XCIN_MCU
J15
XCIN
XCOUT_MCU
J14
XCOUT
GND
Y1
20MHz/8p
Y2
32.768KHz/9p
C18
15p
C22
15p
C23
15p
C24
15p
MCU供电电路
+3.3V
C8
10u
C9
100n
C12
100n
C15
10u
C16
100n
U3D
R7FA8D1BH
A13
VCC_USB
F13
VCC_USBHS
H13
AVCC_USBHS
B13
VSS_USB
G15
VSS1_USBHS
G14
VSS2_USBHS
TODO: ADC
POWER Ext
C10
2.2u
C13
100n
C17
100n
C19
100n
AVCC0
VREFH
VREFH0
N8
AVCC0
R8
VREFH
R9
VREFH0
N9
AVSS0
P8
VREFL
P9
VREFL0
TODO: GND
partition
+1V8
C11
100n
C14
100n
C11
VCC18_MIPI
B9
AVCC_MIPI
C10
VSS_MIPI
C20
22u
C21
100n
22uF X7R?X5R?
G2
VCC_DCDC
G1
VCC_DCDC
J1
VSS_DCDC
+BATT
0R
R61
C25
100n
VBATT
K14
VCC
F12
G12
G9
H9
J9
J6
VCC2
J3
P3
C26
100n
C27
100n
C29
100n
C31
100n
C33
100n
C35
100n
C38
100n
C40
100n
VCL
A8
F1
G6
H6
K15
R6
+1V2
C30
220n
C32
220n
C34
220n
C36
220n
C37
220n
C39
220n
VLO
H2
H1
L2
2.2uH
C28
47u
VSS
C12
G8
G7
H12
H8
H7
J13
J8
J7
J2
R3
Vision Board
https://www.rt-thread.org/
RT-Thread 上海睿赛德电子科技有限公司
Sheet: /RA8D1 MCU - Power and Clocks/
File: RA8D1 MCU - Power and Clocks.kicad_sch
Title:
Size: A3
Date:
Rev:
KiCad E.D.A. kicad 7.0.5
Id: 3/12

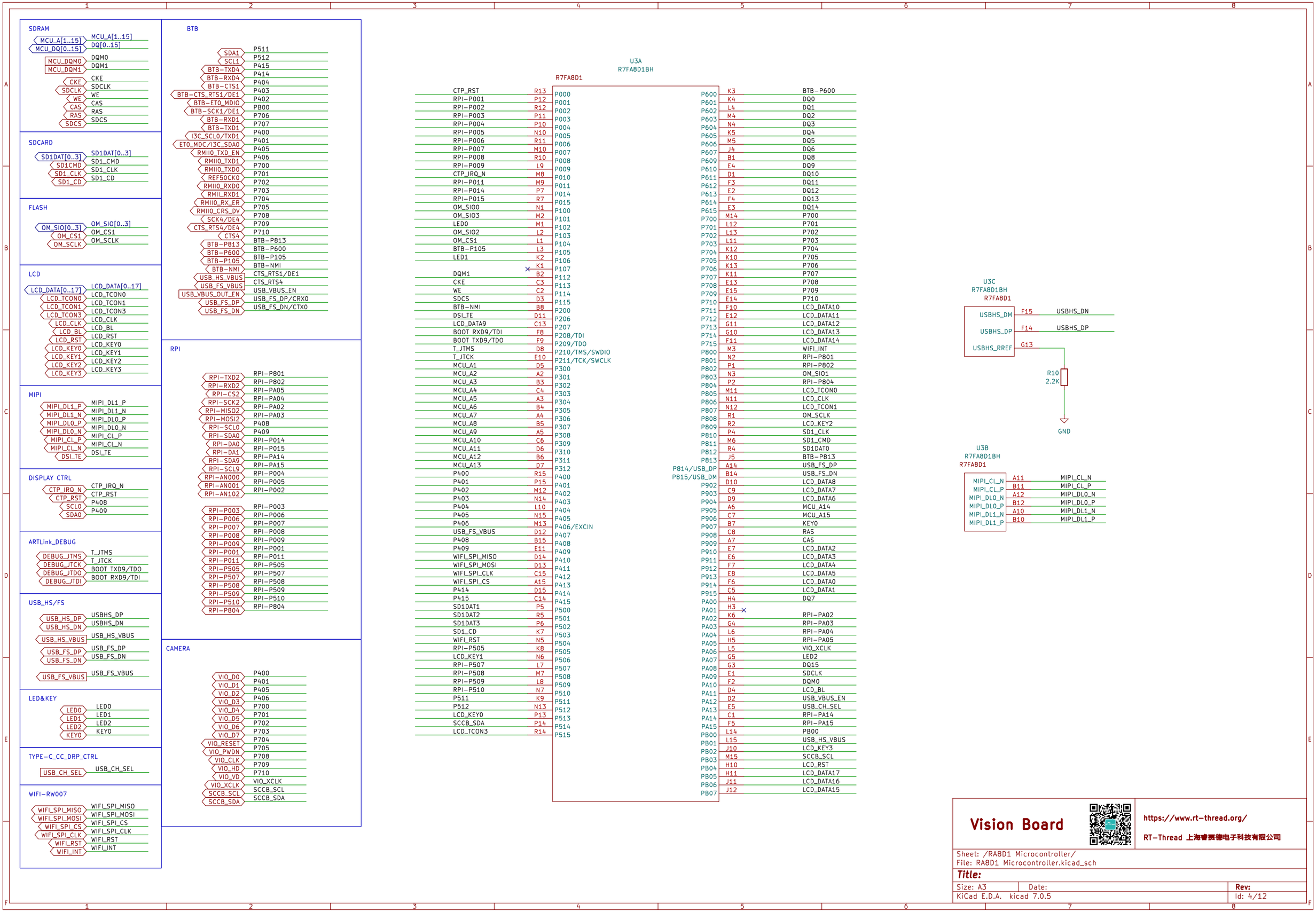
SDRAM
MCU_A[1..15] MCU_A[1..15]
MCU_DQ[0..15] DQ[0..15]
MCU_DQM0 DQM0
MCU_DQM1 DQM1
CKE CKE
SDCLK SDCLK
WE WE
CAS CAS
RAS RAS
SDCS SDCS
SDCARD
SD1DAT[0..3] SD1DAT[0..3]
SD1CMD SD1_CMD
SD1_CLK SD1_CLK
SD1_CD SD1_CD
FLASH
OM_SIO[0..3] OM_SIO[0..3]
OM_CS1 OM_CS1
OM_SCLK OM_SCLK
LCD
LCD_DATA[0..17] LCD_DATA[0..17]
LCD_TCON0 LCD_TCON0
LCD_TCON1 LCD_TCON1
LCD_TCON3 LCD_TCON3
LCD_CLK LCD_CLK
LCD_BL LCD_BL
LCD_RST LCD_RST
LCD_KEY0 LCD_KEY0
LCD_KEY1 LCD_KEY1
LCD_KEY2 LCD_KEY2
LCD_KEY3 LCD_KEY3
MIPI
MIPI_DL1_P MIPI_DL1_P
MIPI_DL1_N MIPI_DL1_N
MIPI_DL0_P MIPI_DL0_P
MIPI_DL0_N MIPI_DL0_N
MIPI_CL_P MIPI_CL_P
MIPI_CL_N MIPI_CL_N
DSI_TE DSI_TE
DISPLAY CTRL
CTP_IRQ_N CTP_IRQ_N
CTP_RST CTP_RST
SCL0 P408
SDA0 P409
ARTLink_DEBUG
DEBUG_JTMS T_JTMS
DEBUG_JTCK T_JTCK
DEBUG_JTDO BOOT TXD9/TDO
DEBUG_JTDI BOOT RXD9/TDI
USB_HS/FS
USB_HS_DP USBHS_DP
USB_HS_DN USBHS_DN
USB_HS_VBUS USB_HS_VBUS
USB_FS_DP USB_FS_DP
USB_FS_DN USB_FS_DN
USB_FS_VBUS USB_FS_VBUS
LED&KEY
LED0 LED0
LED1 LED1
LED2 LED2
KEY0 KEY0
TYPE-C_CC_DRP_CTRL
USB_CH_SEL USB_CH_SEL
WIFI-RW007
WIFI_SPI_MISO WIFI_SPI_MISO
WIFI_SPI_MOSI WIFI_SPI_MOSI
WIFI_SPI_CS WIFI_SPI_CS
WIFI_SPI_CLK WIFI_SPI_CLK
WIFI_RST WIFI_RST
WIFI_INT WIFI_INT
BTB
SDA1 P511
SCL1 P512
BTB-TXD4 P415
BTB-RXD4 P414
BTB-CTS1 P404
BTB-CTS_RTS1/DE1 P403
BTB-ET0_MDIO P402
BTB-SCK1/DE1 PB00
BTB-RXD1 P706
BTB-TXD1 P707
I3C_SCL0/TXD1 P400
ET0_MDC/I3C_SDA0 P401
RMII0_TXD_EN P405
RMII0_TXD1 P406
RMII0_TXD0 P700
REF50CK0 P701
RMII0_RXD0 P702
RMII_RXD1 P703
RMII0_RX_ER P704
RMII0_CRS_DV P705
SCK4/DE4 P708
CTS_RTS4/DE4 P709
CTS4 P710
BTB-P813 BTB-P813
BTB-P600 BTB-P600
BTB-P105 BTB-P105
BTB-NMI BTB-NMI
USB_HS_VBUS CTS_RTS1/DE1
USB_FS_VBUS CTS_RTS4
USB_VBUS_OUT_EN USB_VBUS_EN
USB_FS_DP USB_FS_DP/CRX0
USB_FS_DN USB_FS_DN/CTX0
RPI
RPI-TXD2 RPI-P801
RPI-RXD2 RPI-P802
RPI-CS2 RPI-PA05
RPI-SCK2 RPI-PA04
RPI-MISO2 RPI-PA02
RPI-MOSI2 RPI-PA03
RPI-SCL0 P408
RPI-SDA0 P409
RPI-DA0 RPI-P014
RPI-DA1 RPI-P015
RPI-SDA9 RPI-PA14
RPI-SCL9 RPI-PA15
RPI-AN000 RPI-P004
RPI-AN001 RPI-P005
RPI-AN102 RPI-P002
RPI-P003 RPI-P003
RPI-P006 RPI-P006
RPI-P007 RPI-P007
RPI-P008 RPI-P008
RPI-P009 RPI-P009
RPI-P001 RPI-P001
RPI-P011 RPI-P011
RPI-P505 RPI-P505
RPI-P507 RPI-P507
RPI-P508 RPI-P508
RPI-P509 RPI-P509
RPI-P510 RPI-P510
RPI-P804 RPI-P804
CAMERA
VIO_D0 P400
VIO_D1 P401
VIO_D2 P405
VIO_D3 P406
VIO_D4 P700
VIO_D5 P701
VIO_D6 P702
VIO_D7 P703
VIO_RESET P704
VIO_PWDN P705
VIO_CLK P708
VIO_HD P709
VIO_VD P710
VIO_XCLK VIO_XCLK
SCCB_SCL SCCB_SCL
SCCB_SDA SCCB_SDA
U3A
R7FA8D1BH
R7FA8D1
CTP_RST R13 P000
RPI-P001 P12 P001
RPI-P002 R12 P002
RPI-P003 P11 P003
RPI-P004 P10 P004
RPI-P005 N10 P005
RPI-P006 R11 P006
RPI-P007 M10 P007
RPI-P008 R10 P008
RPI-P009 L9 P009
CTP_IRQ_N M8 P010
RPI-P011 M9 P011
RPI-P014 P7 P014
RPI-P015 R7 P015
OM_SIO0 N1 P100
OM_SIO3 M2 P101
LED0 M1 P102
OM_SIO2 L2 P103
OM_CS1 L1 P104
BTB-P105 L3 P105
LED1 K2 P106
K1 P107
DQM1 B2 P112
CKE C3 P113
WE C2 P114
SDCS D3 P115
BTB-NMI B8 P200
DSI_TE D11 P206
LCD_DATA9 C13 P207
BOOT RXD9/TDI F8 P208/TDI
BOOT TXD9/TDO F9 P209/TDO
T_JTMS D8 P210/TMS/SWDIO
T_JTCK E10 P211/TCK/SWCLK
MCU_A1 D5 P300
MCU_A2 A2 P301
MCU_A3 B3 P302
MCU_A4 C4 P303
MCU_A5 A3 P304
MCU_A6 B4 P305
MCU_A7 A4 P306
MCU_A8 B5 P307
MCU_A9 A5 P308
MCU_A10 C6 P309
MCU_A11 D6 P310
MCU_A12 B6 P311
MCU_A13 D7 P312
P400 R15 P400
P401 P15 P401
P402 M12 P402
P403 N14 P403
P404 L10 P404
P405 N15 P405
P406 M13 P406/EXCIN
USB_FS_VBUS D12 P407
P408 B15 P408
P409 E11 P409
WIFI_SPI_MISO D14 P410
WIFI_SPI_MOSI D13 P411
WIFI_SPI_CLK C15 P412
WIFI_SPI_CS A15 P413
P414 D15 P414
P415 C14 P415
SD1DAT1 P5 P500
SD1DAT2 R5 P501
SD1DAT3 P6 P502
SD1_CD K7 P503
WIFI_RST N5 P504
RPI-P505 K8 P505
LCD_KEY1 N6 P506
RPI-P507 L7 P507
RPI-P508 M7 P508
RPI-P509 L8 P509
RPI-P510 N7 P510
P511 K9 P511
P512 N13 P512
LCD_KEY0 P13 P513
SCCB_SDA P14 P514
LCD_TCON3 R14 P515
P600 K3 BTB-P600
P601 K4 DQ0
P602 L4 DQ1
P603 M4 DQ2
P604 N4 DQ3
P605 K5 DQ4
P606 M5 DQ5
P607 J4 DQ6
P609 B1 DQ8
P610 E4 DQ9
P611 D1 DQ10
P612 F3 DQ11
P613 E2 DQ12
P614 F4 DQ13
P615 E3 DQ14
P700 M14 P700
P701 L12 P701
P702 L13 P702
P703 L11 P703
P704 K12 P704
P705 K10 P705
P706 K13 P706
P707 K11 P707
P708 E13 P708
P709 E15 P709
P710 E14 P710
P711 F10 LCD_DATA10
P712 E12 LCD_DATA11
P713 G11 LCD_DATA12
P714 G10 LCD_DATA13
P715 F11 LCD_DATA14
P800 M3 WIFI_INT
P801 N2 RPI-P801
P802 P1 RPI-P802
P803 N3 OM_SIO1
P804 P2 RPI-P804
P805 M11 LCD_TCON0
P806 N11 LCD_CLK
P807 N12 LCD_TCON1
P808 R1 OM_SCLK
P809 R2 LCD_KEY2
P810 P4 SD1_CLK
P811 M6 SD1_CMD
P812 R4 SD1DAT0
P813 J5 BTB-P813
P814/USB_DP A14 USB_FS_DP
P815/USB_DM B14 USB_FS_DN
P902 D10 LCD_DATA8
P903 C9 LCD_DATA7
P904 D9 LCD_DATA6
P905 A6 MCU_A14
P906 C7 MCU_A15
P907 B7 KEY0
P908 C8 RAS
P909 A7 CAS
P910 E7 LCD_DATA2
P911 E6 LCD_DATA3
P912 F7 LCD_DATA4
P913 E8 LCD_DATA5
P914 F6 LCD_DATA0
P915 C5 LCD_DATA1
PA00 H4 DQ7
PA01 H3
PA02 K6 RPI-PA02
PA03 G4 RPI-PA03
PA04 L6 RPI-PA04
PA05 H5 RPI-PA05
PA06 L5 VIO_XCLK
PA07 G5 LED2
PA08 G3 DQ15
PA09 E1 SDCLK
PA10 F2 DQM0
PA11 D4 LCD_BL
PA12 D2 USB_VBUS_EN
PA13 E5 USB_CH_SEL
PA14 C1 RPI-PA14
PA15 F5 RPI-PA15
PB00 L14 PB00
PB01 L15 USB_HS_VBUS
PB02 J10 LCD_KEY3
PB03 M15 SCCB_SCL
PB04 H10 LCD_RST
PB05 H11 LCD_DATA17
PB06 J11 LCD_DATA16
PB07 J12 LCD_DATA15
U3C
R7FA8D1BH
R7FA8D1
USBHS_DM F15 USBHS_DN
USBHS_DP F14 USBHS_DP
USBHS_RREF G13
R10
2.2K
GND
U3B
R7FA8D1BH
R7FA8D1
MIPI_CL_N A11 MIPI_CL_N
MIPI_CL_P B11 MIPI_CL_P
MIPI_DL0_N A12 MIPI_DL0_N
MIPI_DL0_P B12 MIPI_DL0_P
MIPI_DL1_N A10 MIPI_DL1_N
MIPI_DL1_P B10 MIPI_DL1_P
Vision Board
https://www.rt-thread.org/
RT-Thread 上海睿赛德电子科技有限公司
Sheet: /RA8D1 Microcontroller/
File: RA8D1 Microcontroller.kicad_sch
Title:
Size: A3
Date:
Rev:
KiCad E.D.A. kicad 7.0.5
Id: 4/12

USB_HS/FS

USB_HS_DP — USB_HS_DP
USB_HS_DN — USB_HS_DN
USB_HS_VBUS — USB_HS_VBUS
USB_FS_DP — USB_FS_DP
USB_FS_DN — USB_FS_DN
USB_FS_VBUS — USB_FS_VBUS

TYPE-C_CC_DRP_CTRL

USB_CH_SEL — USB_CH_SEL

ART_USB

ART_USB_DP — ART_USB_DP
ART_USB_DN — ART_USB_DN

USB HS/FS切换电路

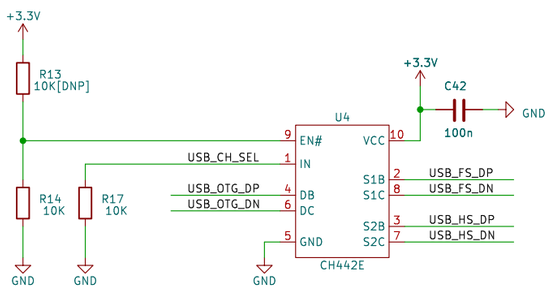

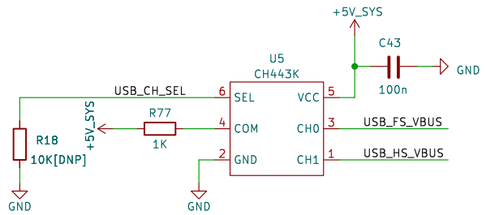

USB-HS/FS

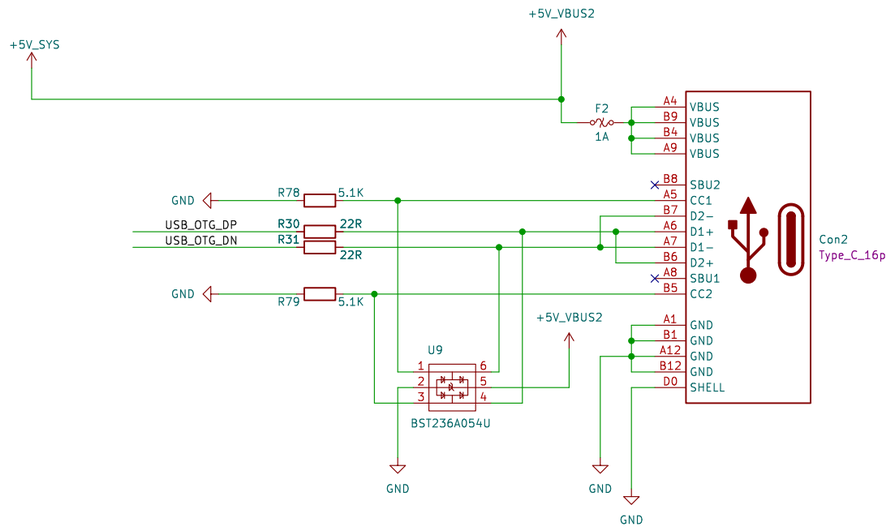

USB-DEBUG

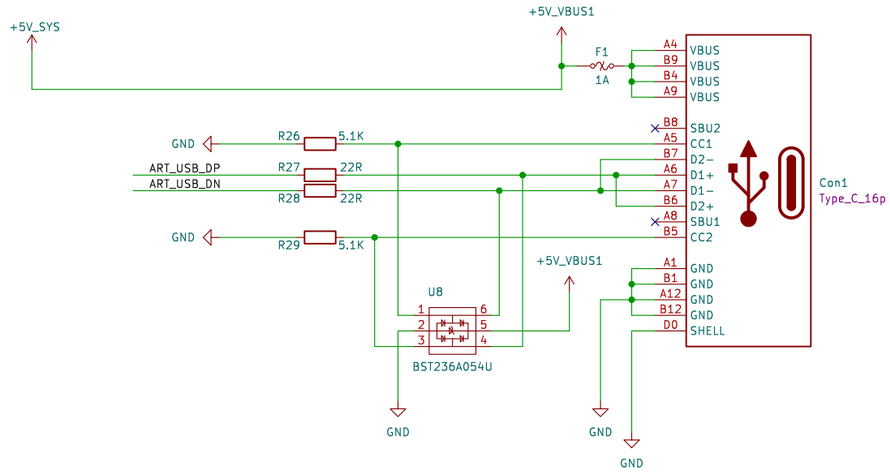

Vision Board

https://www.rt-thread.org/

RT-Thread 上海睿赛德电子科技有限公司

Sheet: /USB INTERFACE/
File: USB INTERFACE.kicad_sch

Title:

Size: A3	Date:	Rev:
KiCad E.D.A. kicad 7.0.5		Id: 5/12

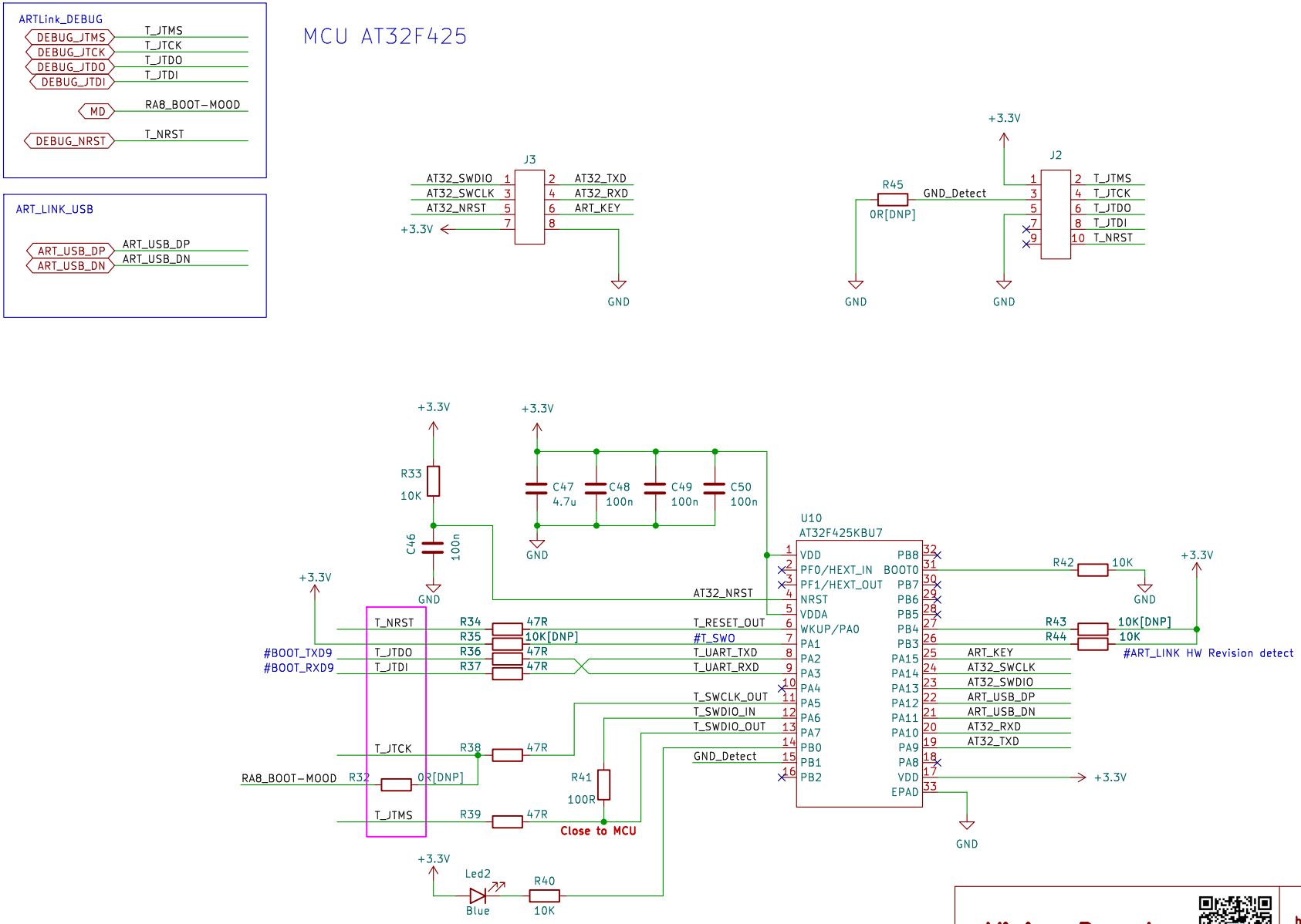

Vision Board

https://www.rt-thread.org/

RT-Thread 上海睿赛德电子科技有限公司

Sheet: /ART-Link/
File: ART-Link.kicad_sch

Title:

Size: A4	Date:	Rev:
KiCad E.D.A. kicad 7.0.5		Id: 6/12

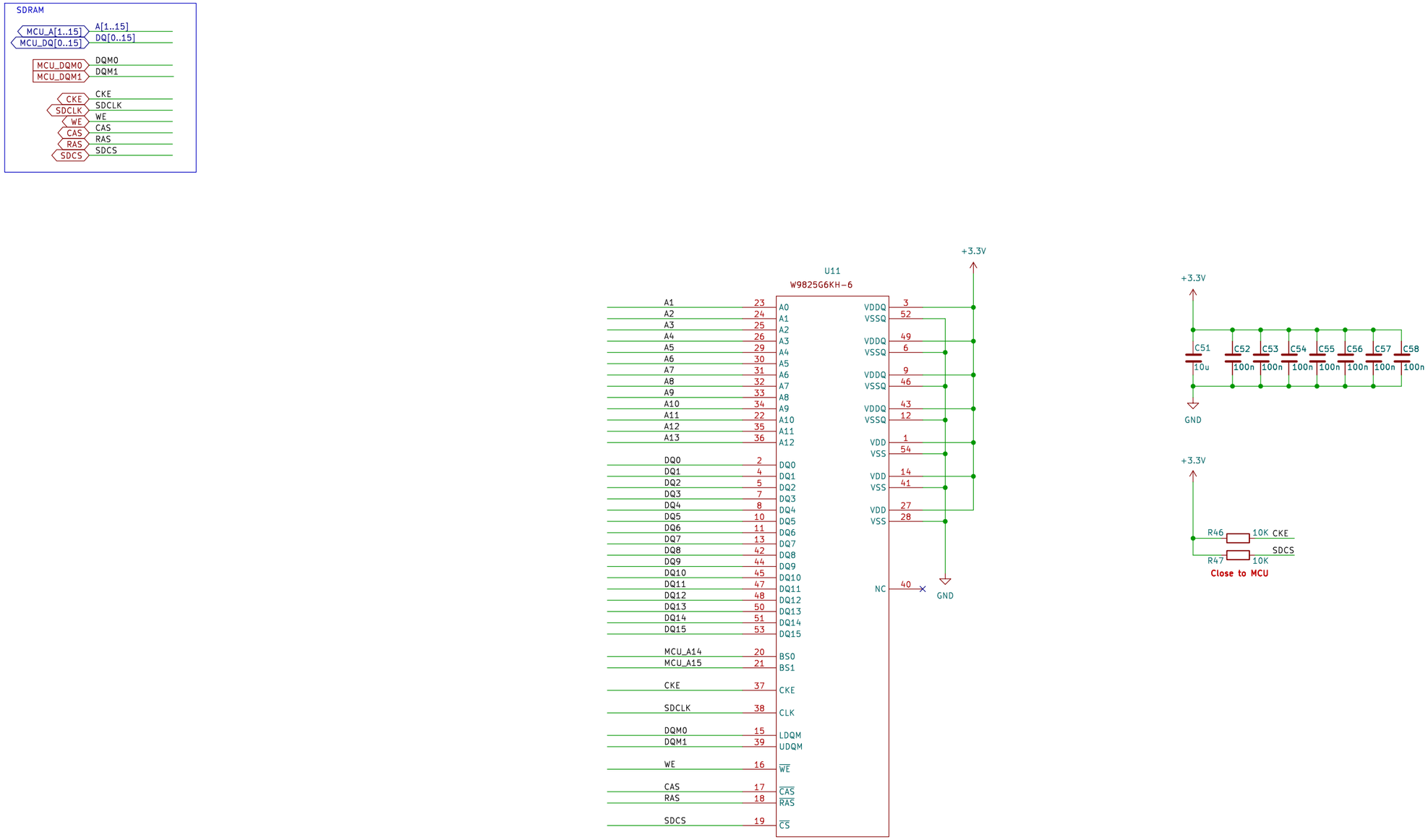

Vision Board	https://www.rt-thread.org/ RT-Thread 上海睿赛德电子科技有限公司	
Sheet: /SDRAM/ File: SDRAM.kicad_sch		
Title:		
Size: A3	Date:	**Rev:**
KiCad E.D.A. kicad 7.0.5		Id: 7/12

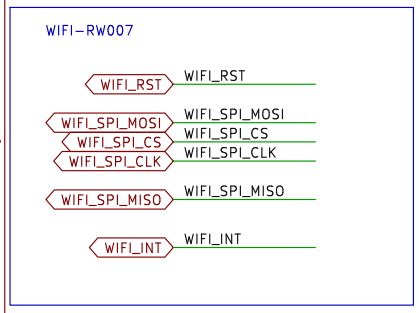

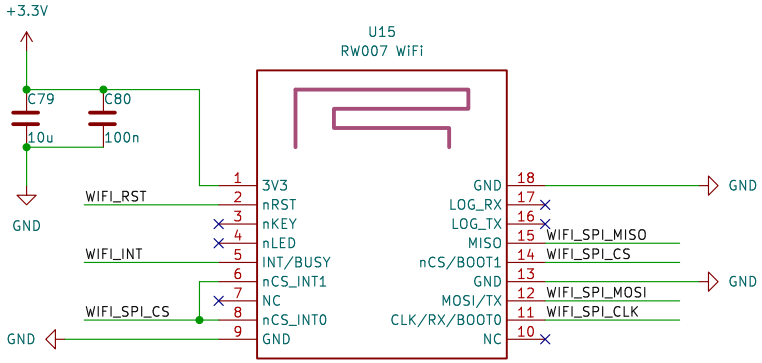

Vision Board

https://www.rt-thread.org/

RT-Thread 上海睿赛德电子科技有限公司

Sheet: /WIFI-RW007/
File: WIFI-AP6212.kicad_sch

Title:

Size: A4	Date:	Rev:
KiCad E.D.A. kicad 7.0.5		Id: 8/12

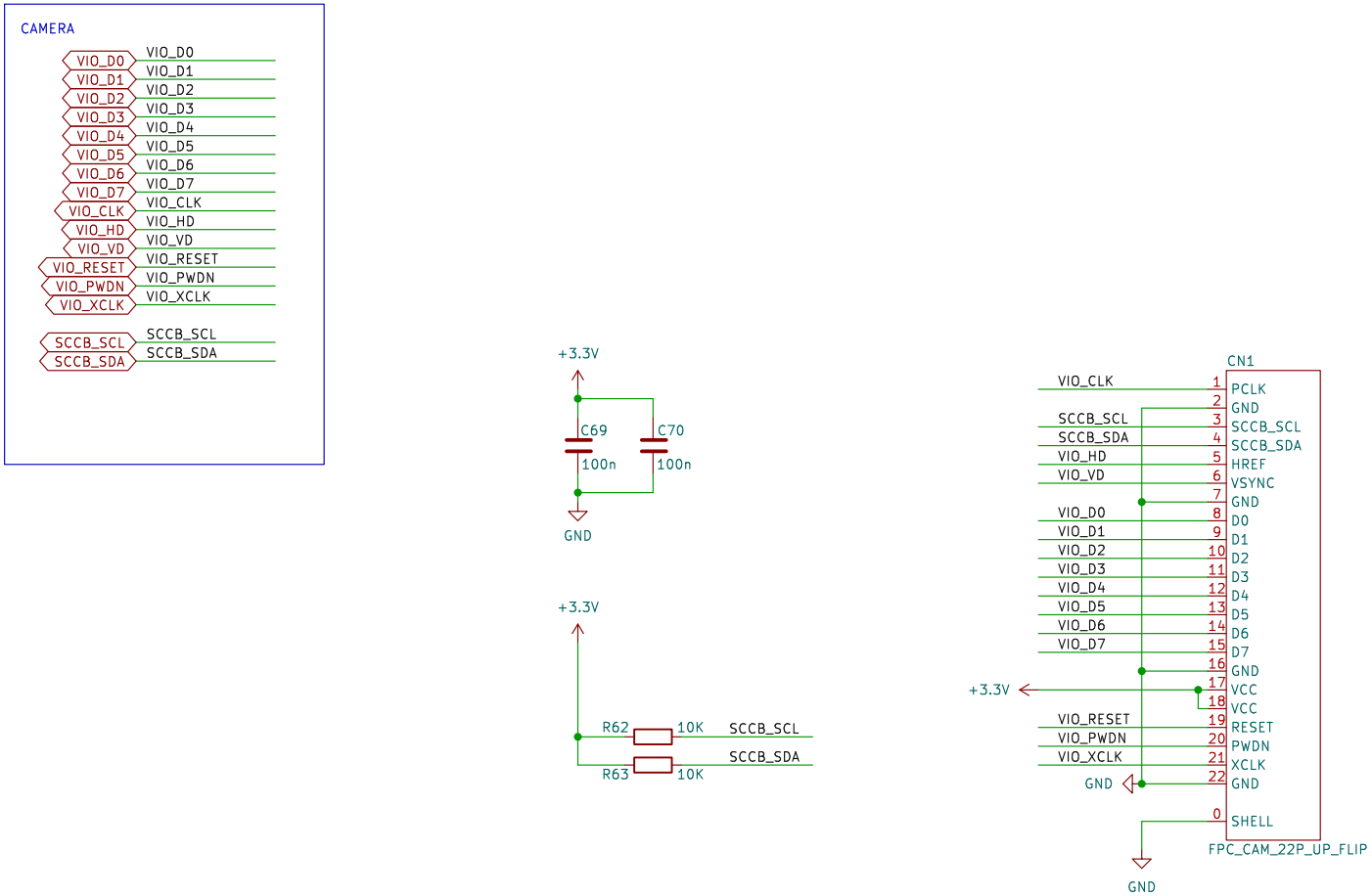

Vision Board

https://www.rt-thread.org/

RT-Thread 上海睿赛德电子科技有限公司

Sheet: /Camera Interface/
File: Camera Interface.kicad_sch

Title:

Size: A4	Date:	Rev:
KiCad E.D.A. kicad 7.0.5		Id: 9/12

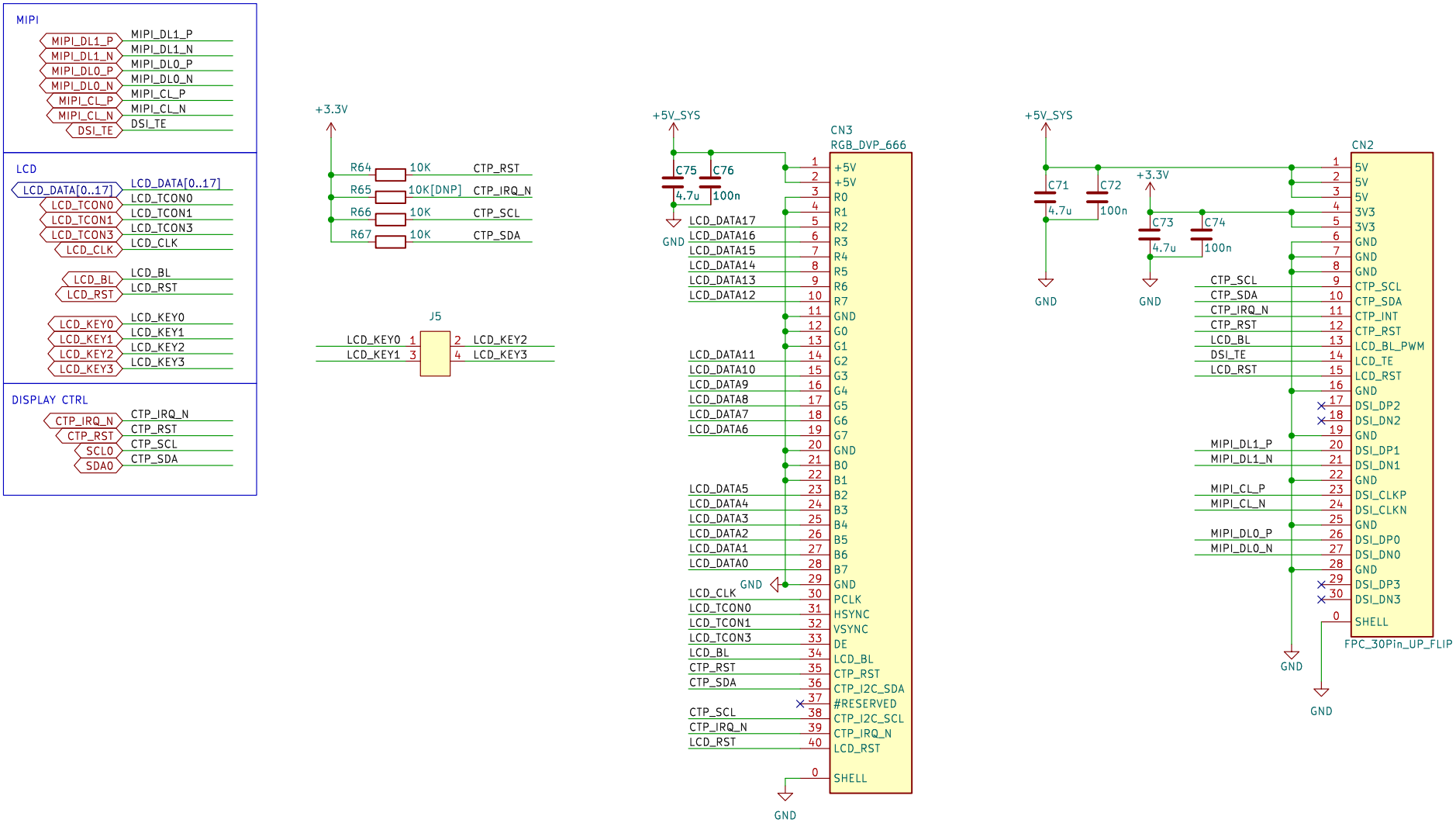

Vision Board

https://www.rt-thread.org/

RT-Thread 上海睿赛德电子科技有限公司

Sheet: /MIPI LCD DISPLAY INTERFACE/
File: MIPI LCD DISPLAY INTERFACE.kicad_sch

Title:

Size: A4	Date:	Rev:
KiCad E.D.A. kicad 7.0.5		Id: 10/12

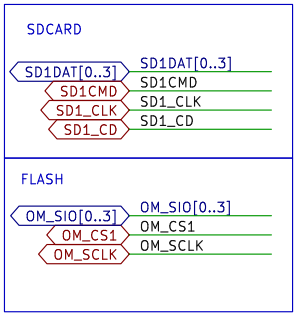

SD-CARD

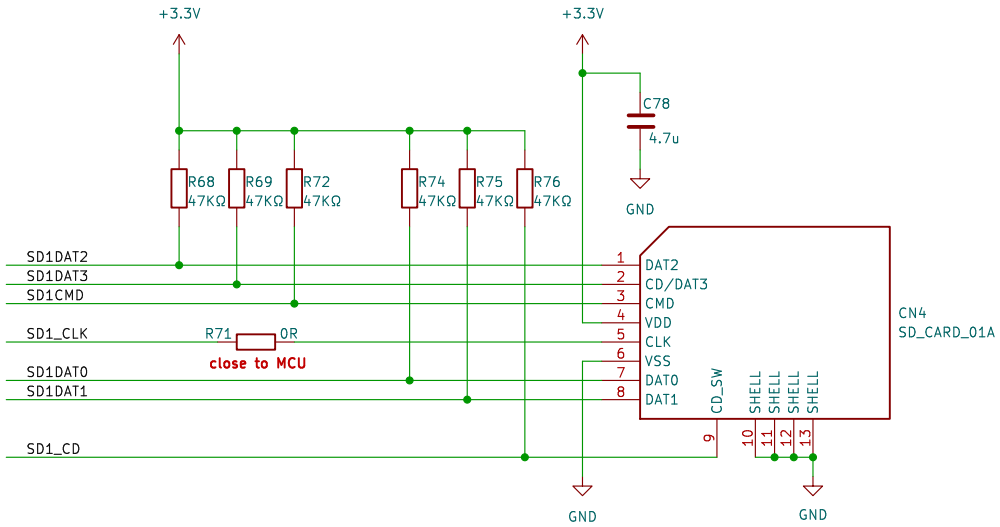

FLASH

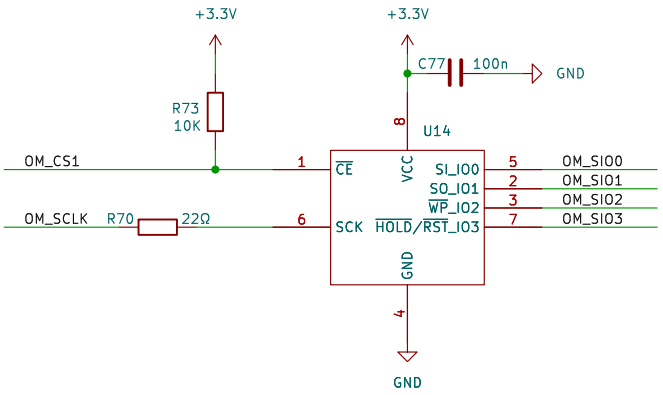

Vision Board	https://www.rt-thread.org/ RT-Thread 上海睿赛德电子科技有限公司	
Sheet: /SDcard&Flash/ File: SDcard.kicad_sch		
Title:		
Size: A4	Date:	**Rev:**
KiCad E.D.A. kicad 7.0.5		Id: 11/12

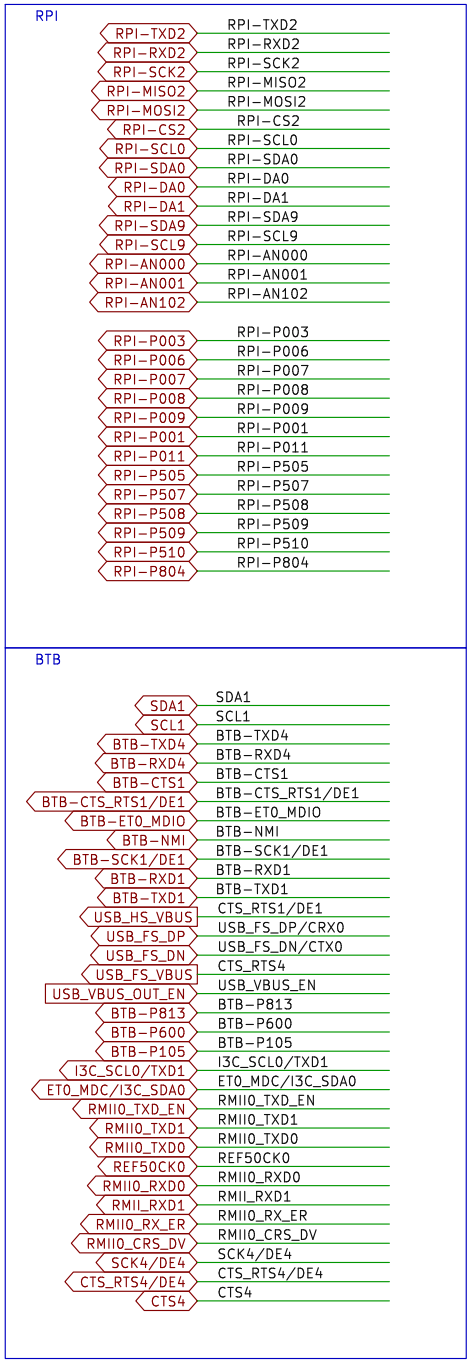

BTB

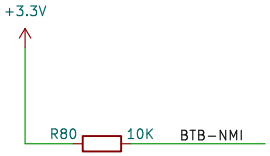

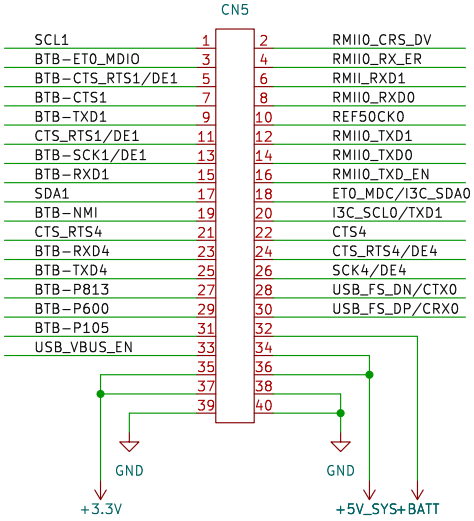

树莓派接口

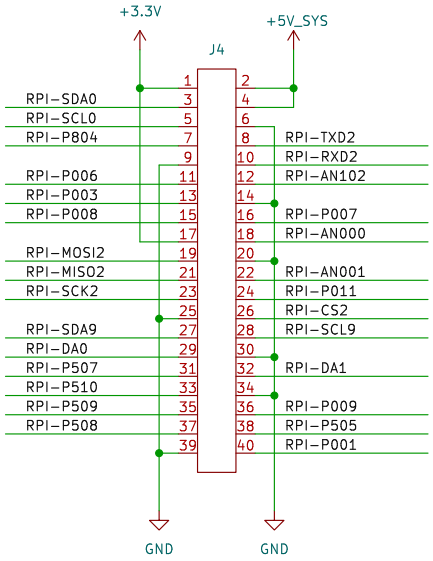

Vision Board

https://www.rt-thread.org/

RT-Thread 上海睿赛德电子科技有限公司

Sheet: /BTB&RPI/
File: BTB&RPI.kicad_sch

Title:

Size: A4	Date:	Rev:
KiCad E.D.A. kicad 7.0.5		Id: 12/12