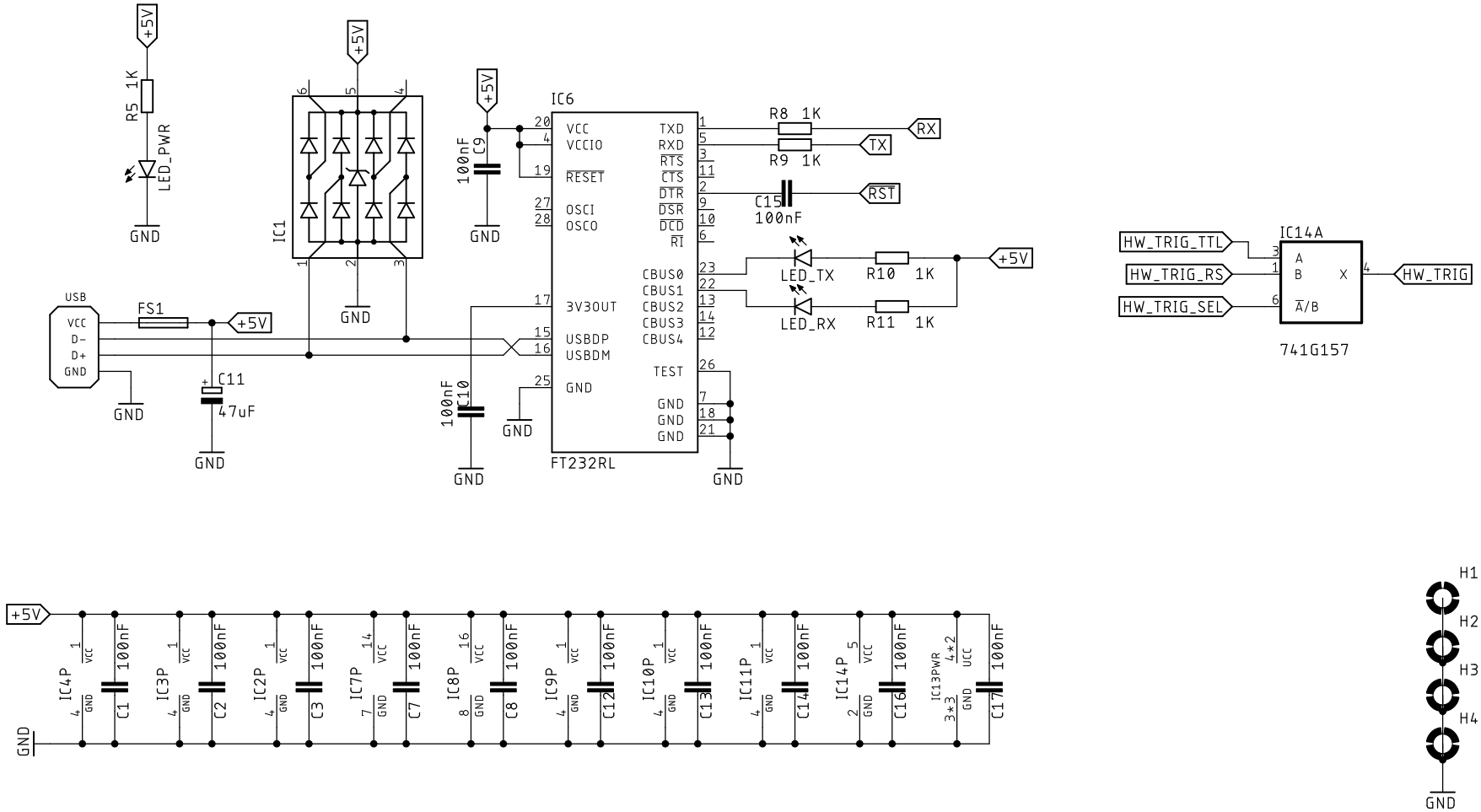

HDR camera controller

30.12.2021 12:26

Sheet: 1/3

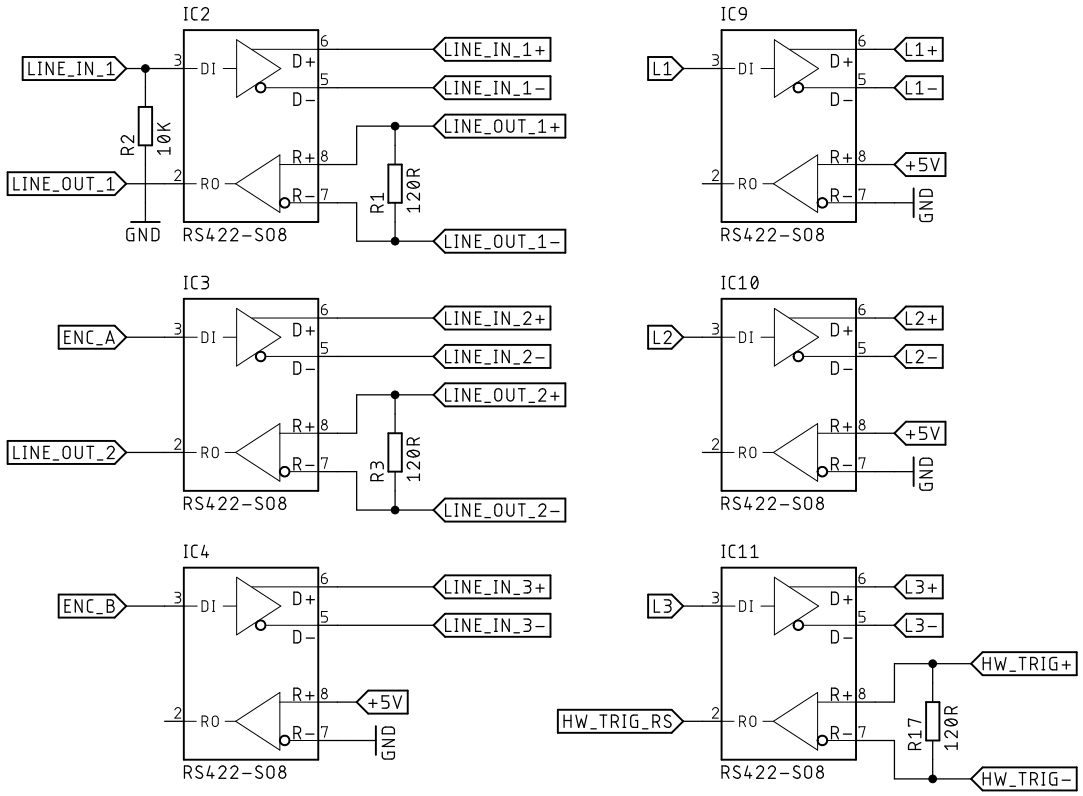

HDR camera controller

30.12.2021 12:26

Sheet: 2/3

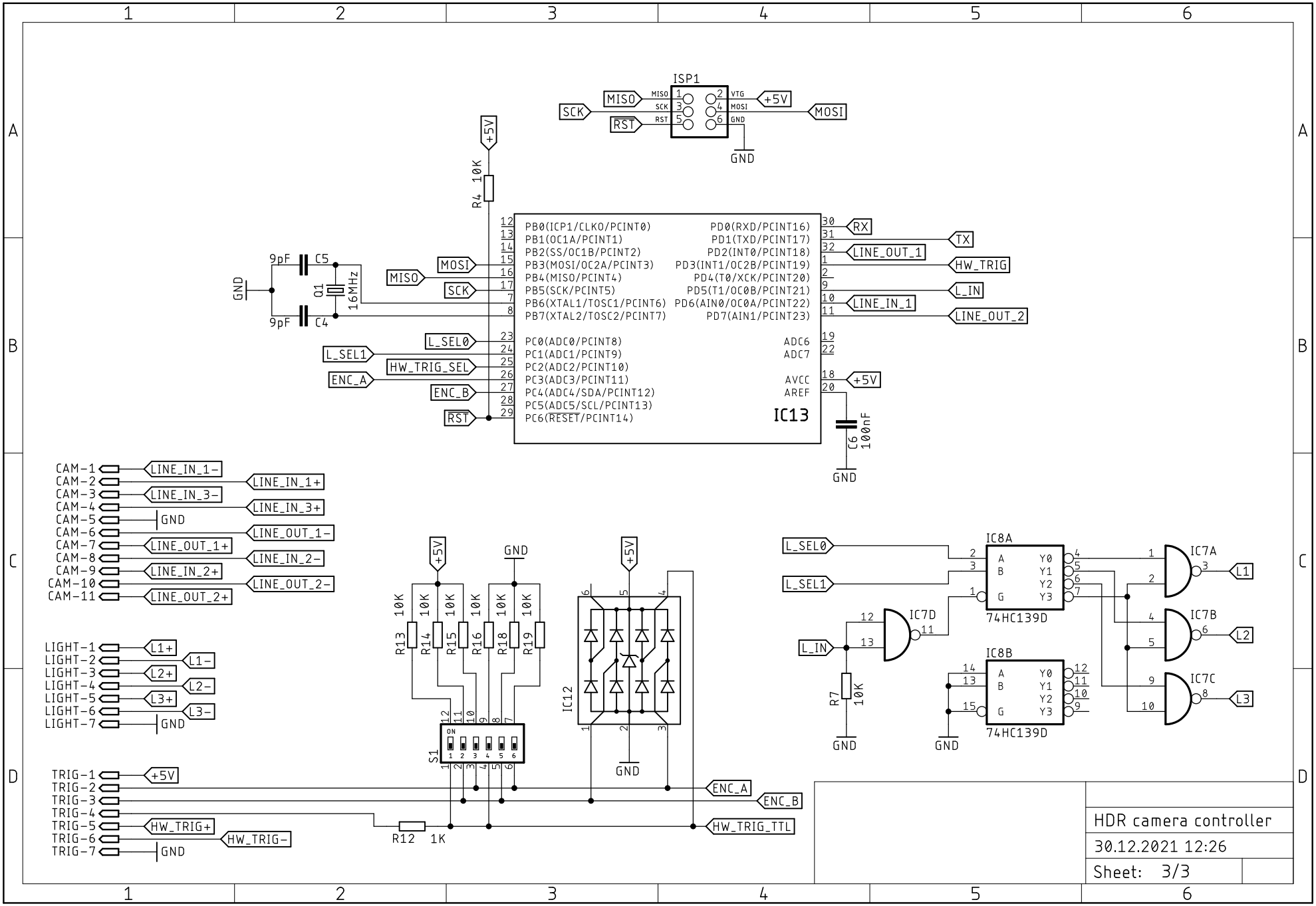
ISP1
MISO
SCK
RST
VTG
MOSI
GND
+5V
R4 10K
IC13
PB0(ICP1/CLKO/PCINT0)
PB1(OC1A/PCINT1)
PB2(SS/OC1B/PCINT2)
PB3(MOSI/OC2A/PCINT3)
PB4(MISO/PCINT4)
PB5(SCK/PCINT5)
PB6(XTAL1/TOSC1/PCINT6)
PB7(XTAL2/TOSC2/PCINT7)
PC0(ADC0/PCINT8)
PC1(ADC1/PCINT9)
PC2(ADC2/PCINT10)
PC3(ADC3/PCINT11)
PC4(ADC4/SDA/PCINT12)
PC5(ADC5/SCL/PCINT13)
PC6(RESET/PCINT14)
PD0(RXD/PCINT16)
PD1(TXD/PCINT17)
PD2(INT0/PCINT18)
PD3(INT1/OC2B/PCINT19)
PD4(T0/XCK/PCINT20)
PD5(T1/OC0B/PCINT21)
PD6(AIN0/OC0A/PCINT22)
PD7(AIN1/PCINT23)
ADC6
ADC7
AVCC
AREF
RX
TX
LINE_OUT_1
HW_TRIG
L_IN
LINE_IN_1
LINE_OUT_2
L_SEL0
L_SEL1
HW_TRIG_SEL
ENC_A
ENC_B
C5 9pF
C4 9pF
Q1 16MHz
C6 100nF
CAM-1
CAM-2
CAM-3
CAM-4
CAM-5
CAM-6
CAM-7
CAM-8
CAM-9
CAM-10
CAM-11
LINE_IN_1-
LINE_IN_1+
LINE_IN_3-
LINE_IN_3+
LINE_OUT_1-
LINE_OUT_1+
LINE_IN_2-
LINE_IN_2+
LINE_OUT_2-
LINE_OUT_2+
LIGHT-1
LIGHT-2
LIGHT-3
LIGHT-4
LIGHT-5
LIGHT-6
LIGHT-7
L1+
L1-
L2+
L2-
L3+
L3-
R13 10K
R14 10K
R15 10K
R16 10K
R18 10K
R19 10K
S1
IC12
TRIG-1
TRIG-2
TRIG-3
TRIG-4
TRIG-5
TRIG-6
TRIG-7
HW_TRIG+
HW_TRIG-
R12 1K
HW_TRIG_TTL
IC8A
74HC139D
IC8B
74HC139D
IC7A
IC7B
IC7C
IC7D
R7 10K
L1
L2
L3
HDR camera controller
30.12.2021 12:26
Sheet: 3/3