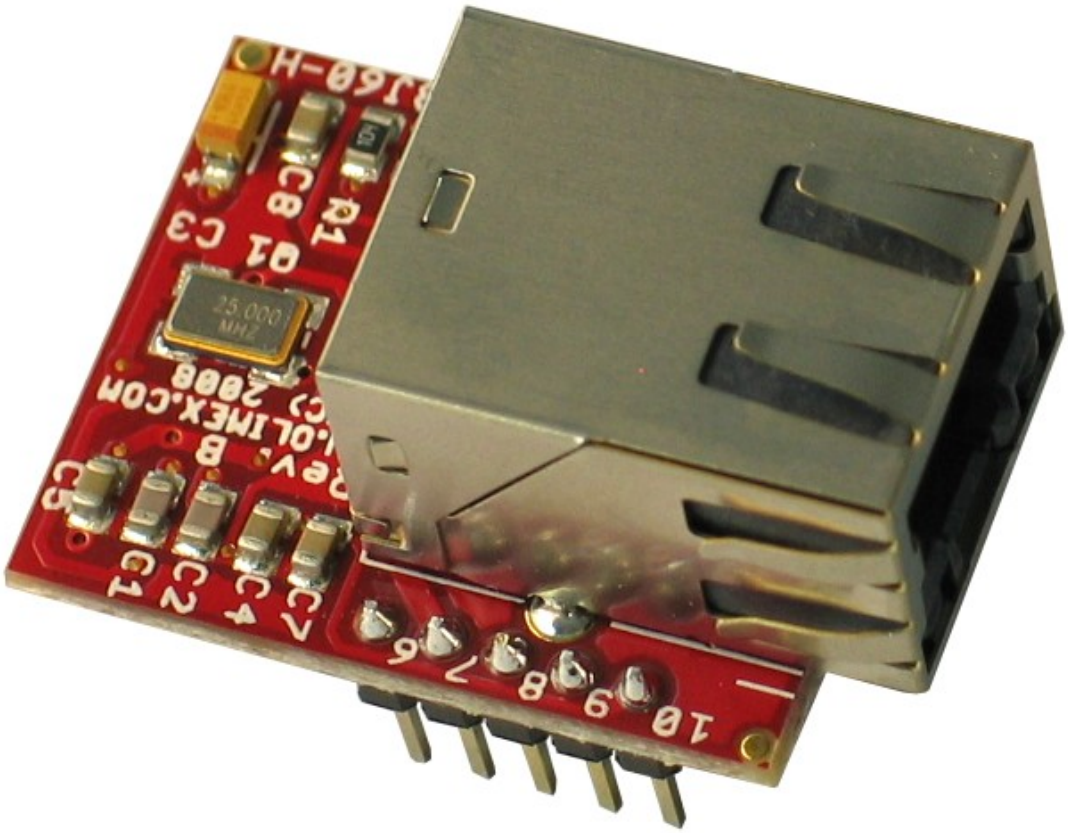

ENC28J60-H development board

Users Manual

All boards produced by Olimex are ROHS compliant

Rev. A, September 2011

Copyright(c) 2011, OLIMEX Ltd, All rights reserved

INTRODUCTION

ENC28J60-H is world's smallest Ethernet controller development board with it's size of only 30x24 mm. It provides easy connection to any microcontroller with only few ports via SPI which makes it perfect for adding Ethernet connectivity to embedded applications.

BOARD FEATURES

- ENC28J60 10 Mbit Ethernet controller
- on-board RJ45 connector with build in Ethernet transformer and two status LEDs
- easy interface to any microcontroller via SPI
- compact size in DIL 10 pin format, the distance between pin rows is 0.8"
- PCB: FR-4, 1.5 mm (0,062"), soldermask, white silkscreen component print
- Dimensions: 30x24 mm (1.18x0.95")

ELECTROSTATIC WARNING

The ENC28J60-H board is shipped in protective anti-static packaging. The board must not be subject to high electrostatic potentials. General practice for working with static sensitive devices should be applied when working with this board.

Ethernet Controller Features

ENC28J60-H board use ENC28J60 stand-alone ethernet controller with these features:

- IEEE 802.3. Compatible Ethernet Controller
- Fully Compatible with 10/100/1000Base-T Networks
- Integrated MAC and 10Base-T PHY
- Supports One 10Base-T Port with Automatic Polarity Detection and Correction
- Supports Full and Half-Duplex modes
- Programmable Automatic Retransmit on Collision
- Programmable Padding and CRC Generation
- Programmable Automatic Rejection of Erroneous Packets
- SPI Interface with Clock Speeds Up to 20 MHz

BLOCK DIAGRAM

ENC28J60 BLOCK DIAGRAM

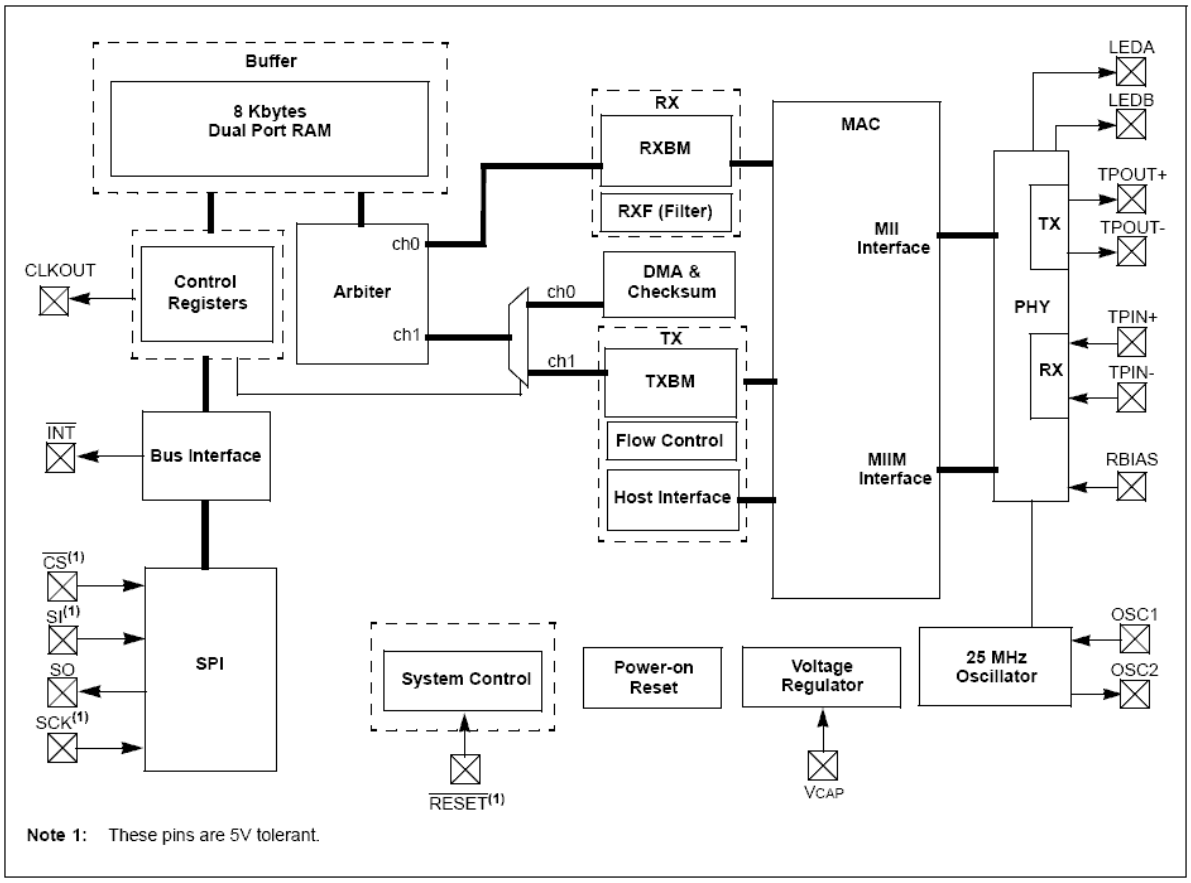

Note 1: These pins are 5V tolerant.

MEMORY MAP

ENC28J60 MEMORY ORGANIZATION

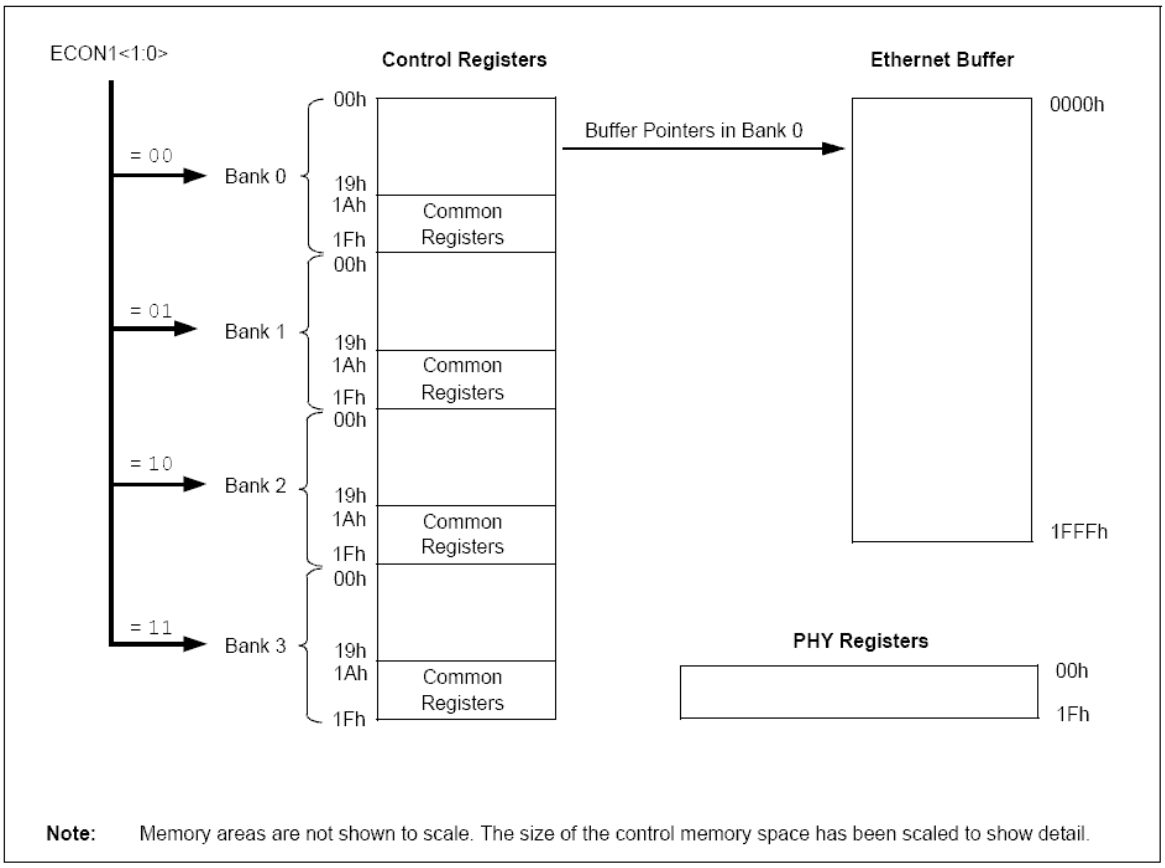

Note: Memory areas are not shown to scale. The size of the control memory space has been scaled to show detail.

SCHEMATIC

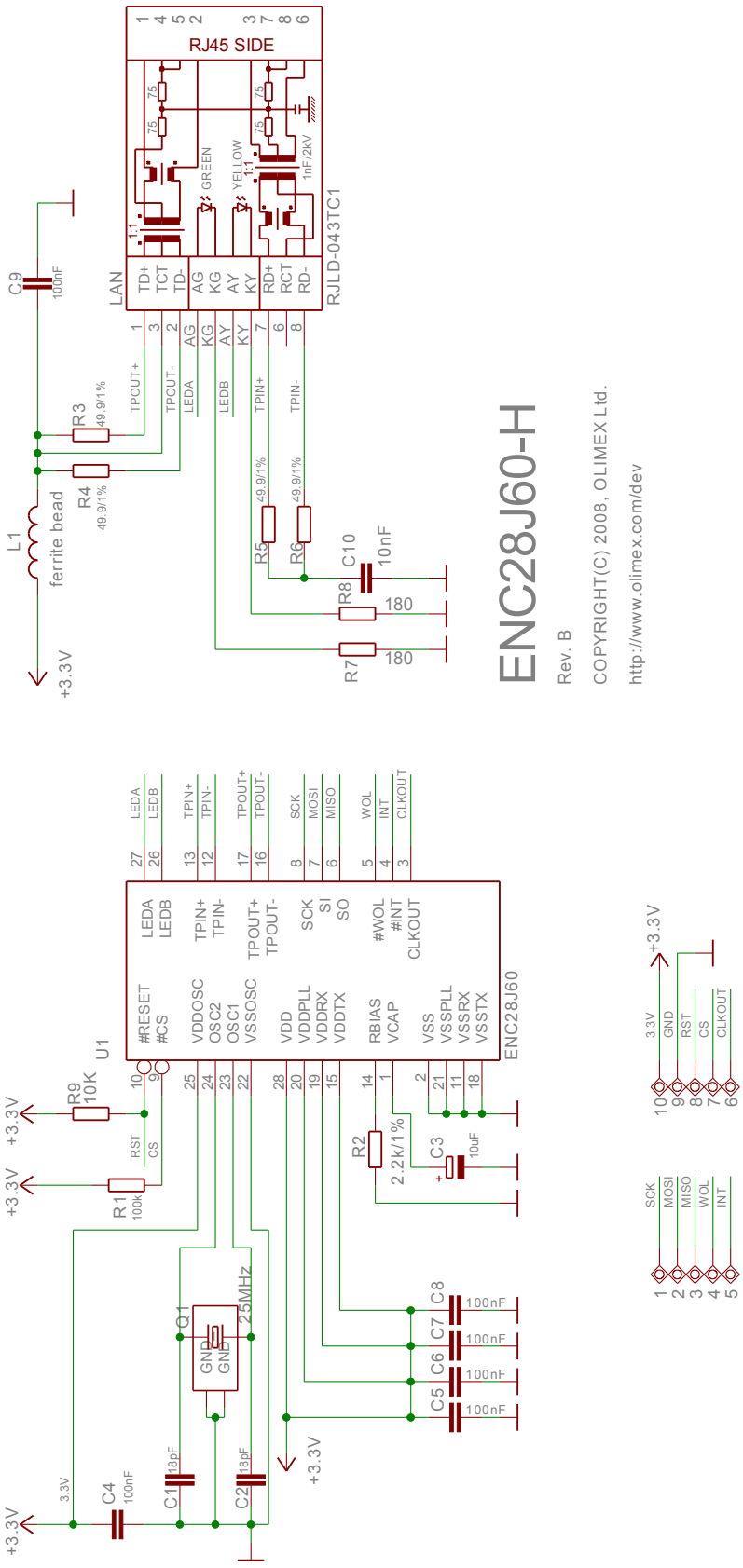
RJ45 SIDE
RJLD-043TC1
LAN
TD+
TCT
TD-
AG
KG
AY
KY
RD+
RCT
RD-
GREEN
YELLOW
1:1
1nF/2kV
75
C9
100nF
R3
49.9/1%
R4
49.9/1%
L1
ferrite bead
+3.3V
TPOUT+
TPOUT-
LEDA
LEDB
TPIN+
TPIN-
R5
R6
C10
10nF
R8
180
R7
180
ENC28J60-H
Rev. B
COPYRIGHT(C) 2008, OLIMEX Ltd.
http://www.olimex.com/dev
U1
ENC28J60
#RESET
#CS
VDDOSC
OSC2
OSC1
VSSOSC
VDD
VDDPLL
VDDRX
VDDTX
RBIAS
VCAP
VSS
VSSPLL
VSSRX
VSSTX
SCK
SI
SO
#WOL
#INT
CLKOUT
R9
10K
R1
100k
RST
CS
R2
2.2k/1%
C3
10uF
Q1
25MHz
GND
C1
18pF
C2
18pF
C4
100nF
C5
C6
C7
C8
100nF
3.3V
GND
RST
CS
CLKOUT
SCK
MOSI
MISO
WOL
INT

POWER SUPPLY CIRCUIT

ENC28J60-H is typically power supplied by EXT pin 10 and pin 9.

RESET CIRCUIT

ENC28J60-H reset circuit includes EXT connector pin 8, U1 pin 10 and R9 (10k).

CLOCK CIRCUIT

Quartz crystal 25 MHz is connected to **ENC28J60** pin 23 (OSC1) and pin24 (OSC2).

JUMPER DESCRIPTION

There are no jumpers on this board.

CONNECTOR DESCRIPTIONS

LAN

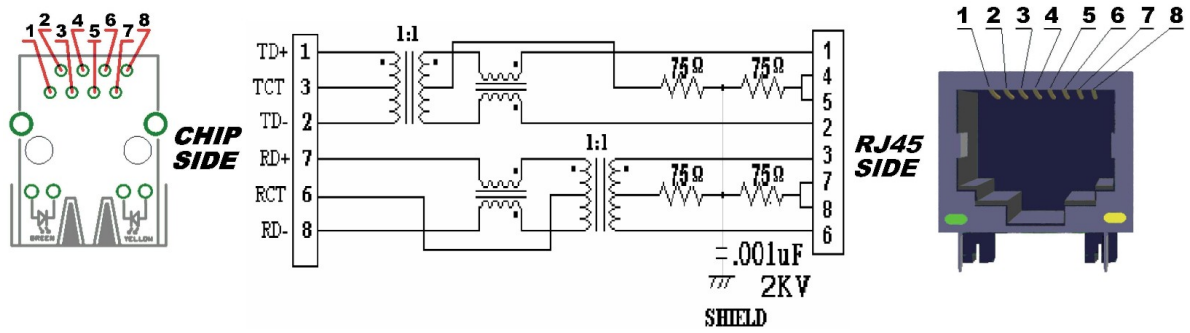

Pin #	Signal Name Chip Side	Pin #	Signal Name Chip Side
1	TX+	5	Not Connected (NC)
2	TX-	6	VDD
3	VDD	7	RX+
4	Not Connected (NC)	8	RX-

LED	Color	Usage
Right	Green	Link status
Left	Yellow	Activity status

EXT

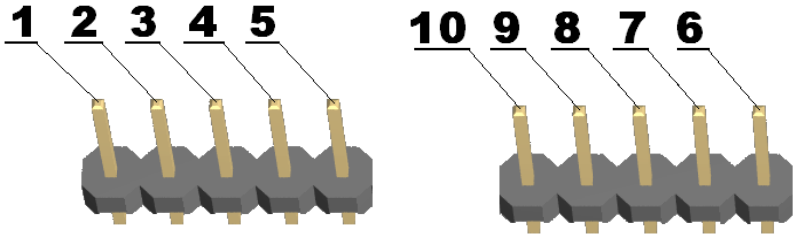

Pin#	Signal Name	Pin#	Signal Name
1	SCK	6	CLKOUT
2	MOSI	7	CS
3	MISO	8	RST
4	WOL	9	GND
5	INT	10	3.3V

MECHANICAL DIMENSIONS

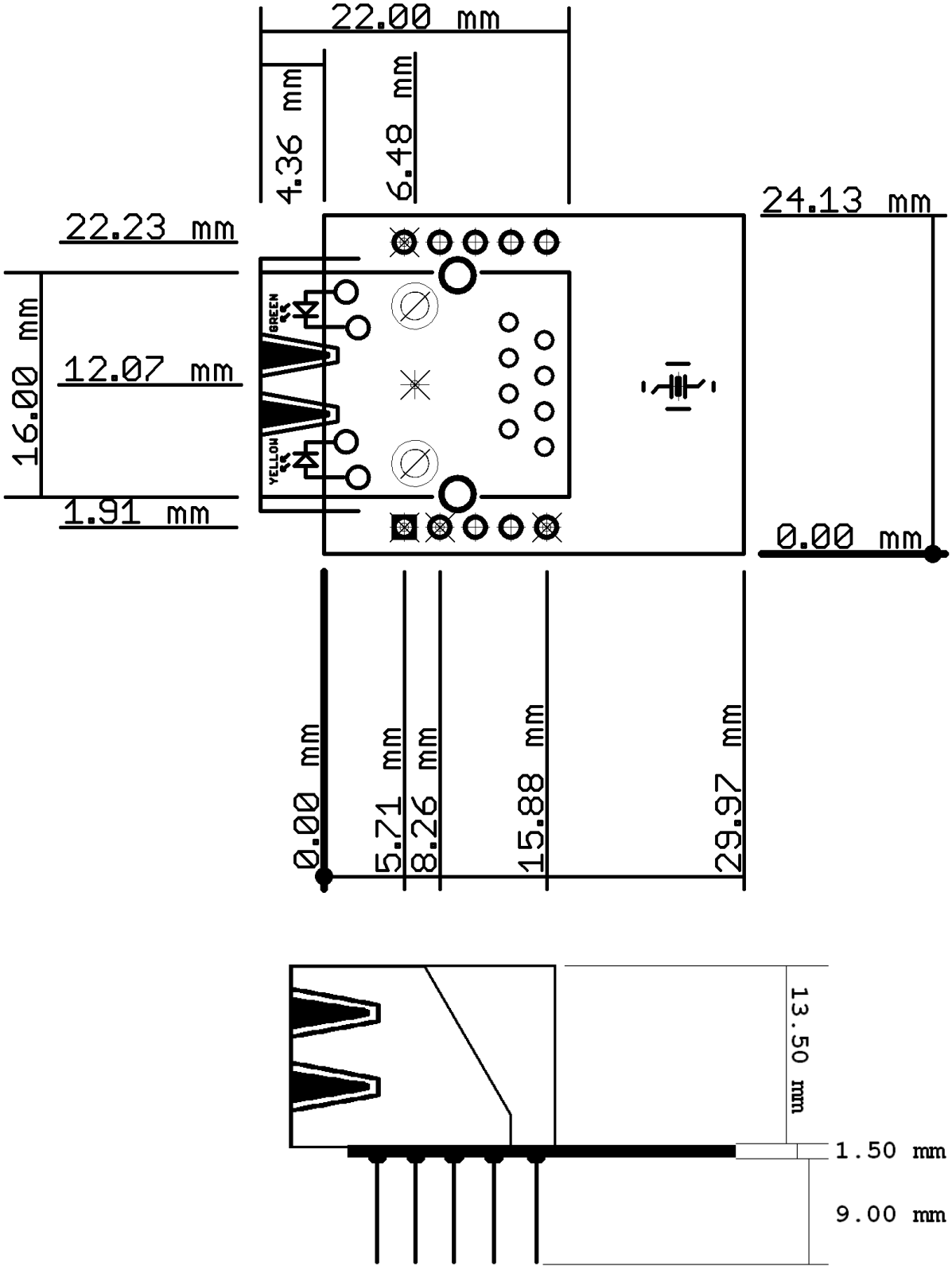

AVAILABLE DEMO SOFTWARE

– Microchip's TCP-IP stack full featured TCP-IP stack, very easy to configure and use with PIC microcontrollers.
– AVR fans now have also demo code for driving ENC28J60 with Bascom thanks to Ben Zijlstra from Netherlands
– Our development boards PIC-WEB and PIC-MINI-WEB use ENC28J60
– uIP1.0 demo code with LPC-P2106 and ENC28J60-H for CrossWorks written by Iain Derrington

ORDER CODE

ENC28J60-H – completely assembled and tested, includes ENC28J60 Ethernet controller

How to order?
You can order to us directly or by any of our distributors.
Check our web www.olimex.com/dev for more info.

Revision history:

Board's revision:	Rev. B - create November 2008
Manual's revision:	Rev. A – added more detailed mechanical dimensions

Disclaimer:

© 2011 Olimex Ltd. All rights reserved. Olimex®, logo and combinations thereof, are registered trademarks of Olimex Ltd. Other terms and product names may be trademarks of others.

The information in this document is provided in connection with Olimex products. No license, express or implied or otherwise, to any intellectual property right is granted by this document or in connection with the sale of Olimex products.

Neither the whole nor any part of the information contained in or the product described in this document may be adapted or reproduced in any material from except with the prior written permission of the copyright holder.

The product described in this document is subject to continuous development and improvements. All particulars of the product and its use contained in this document are given by OLIMEX in good faith. However all warranties implied or expressed including but not limited to implied warranties of merchantability or fitness for purpose are excluded.

This document is intended only to assist the reader in the use of the product. OLIMEX Ltd. shall not be liable for any loss or damage arising from the use of any information in this document or any error or omission in such information or any incorrect use of the product.