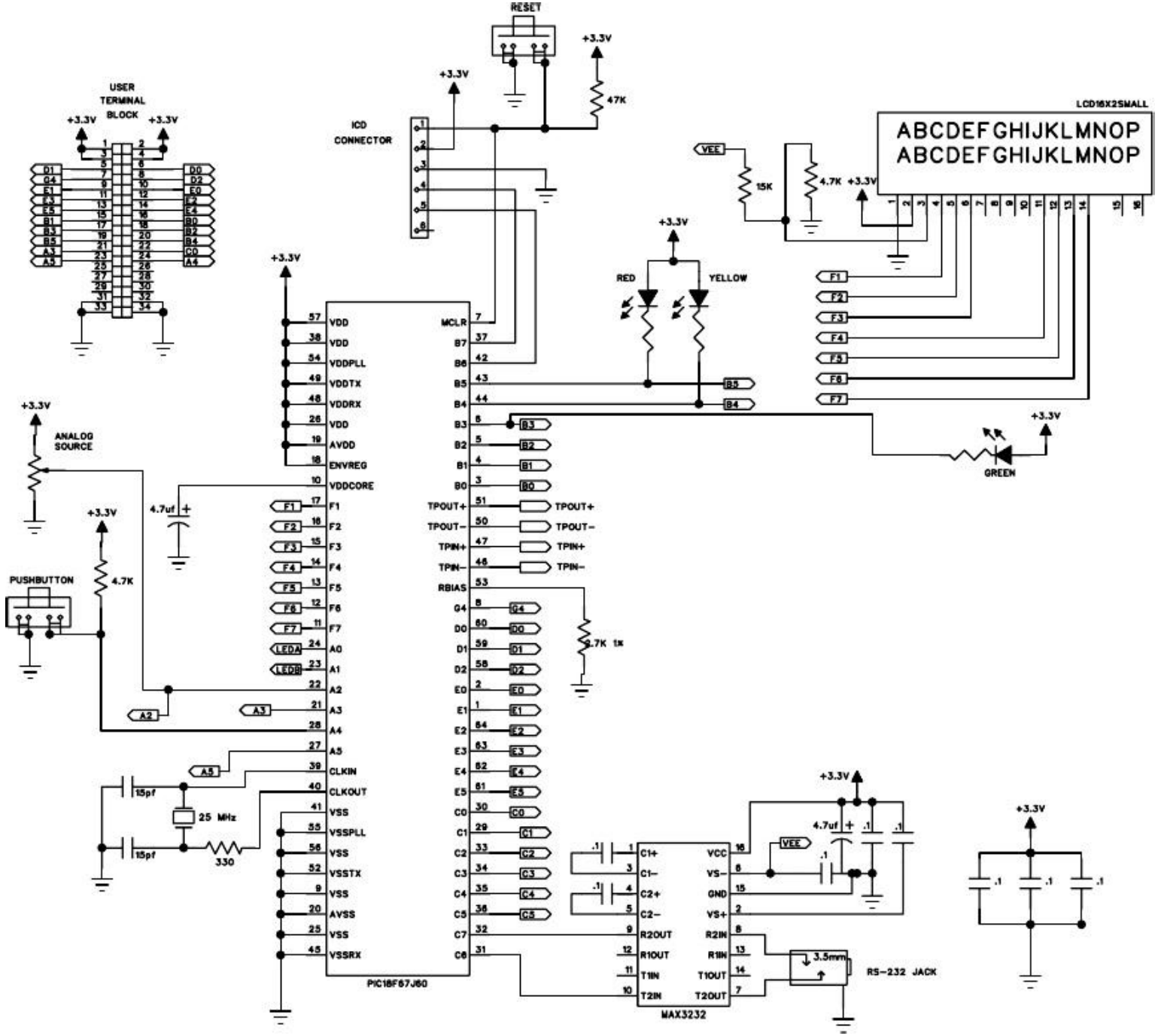
RESET
+3.3V
47K
USER TERMINAL BLOCK
ICD CONNECTOR
LCD16X2SMALL
ABCDEFGHIJKLMNOP
ABCDEFGHIJKLMNOP
VEE
15K
4.7K
RED
YELLOW
GREEN
ANALOG SOURCE
PUSHBUTTON
4.7uf
15pf
25 MHz
330
2.7K 1k
PIC18F67J60
MAX3232
RS-232 JACK
3.5mm

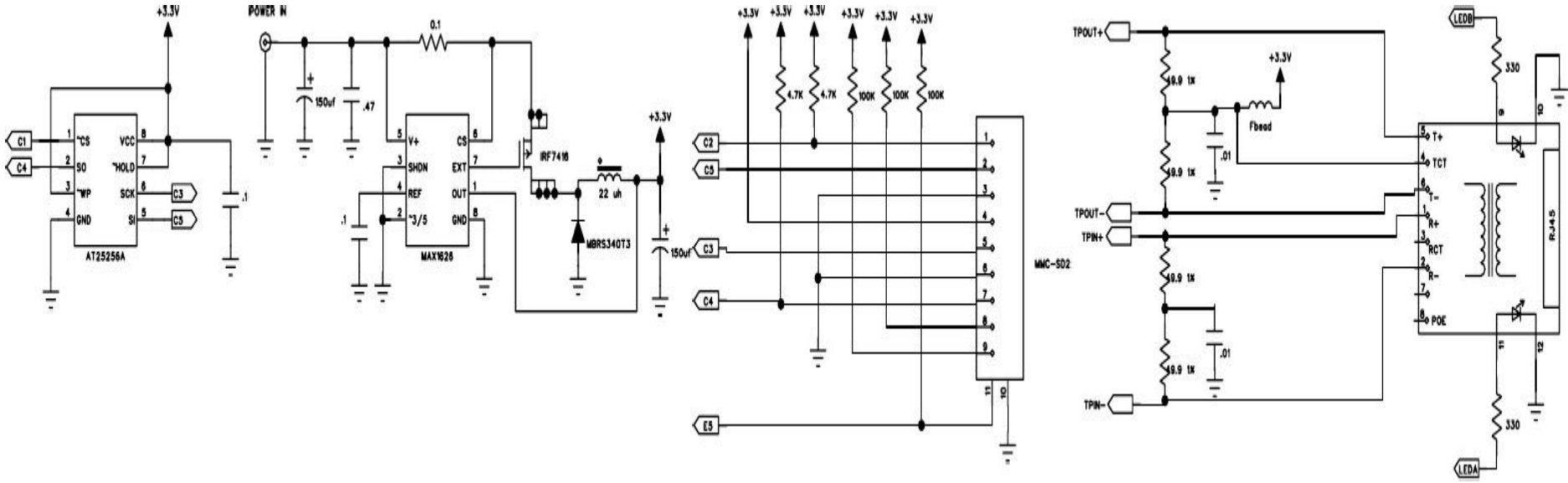
+3.3V
POWER IN
0.1
150uf
.47
C1
C4
CS
SO
WP
GND
VCC
HOLD
SCK
SI
C3
C5
.1
AT25256A
V+
SHDN
REF
3/5
CS
EXT
OUT
GND
MAX1626
IRF7416
22 uh
MBRS340T3
150uf
+3.3V
4.7K
100K
C2
E5
MMC-SD2
TPOUT+
TPOUT-
TPIN+
TPIN-
69.9 1x
Fbead
.01
T+
TCT
T-
R+
RCT
R-
POE
LEDB
LEDA
330
RJ45