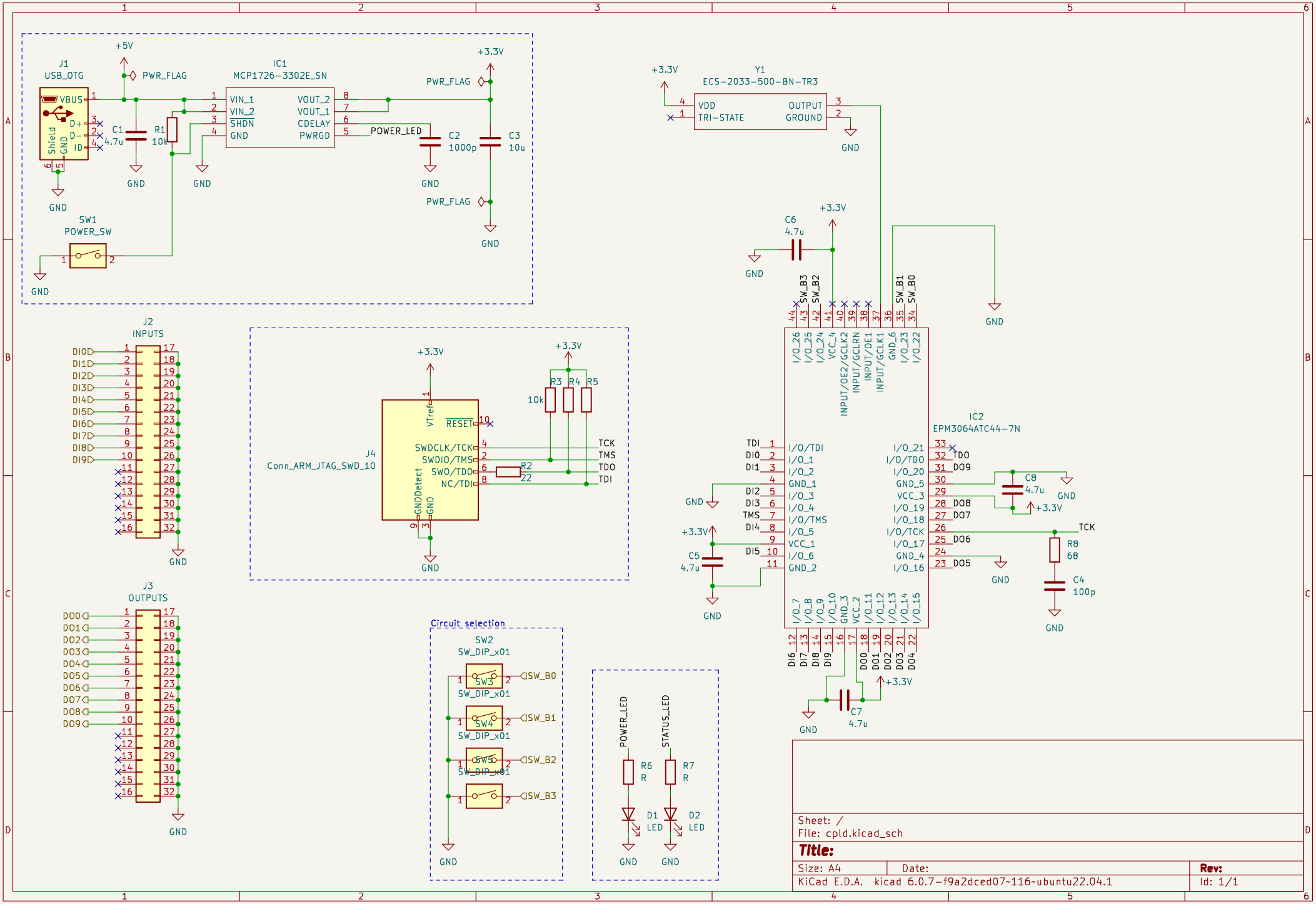
J1
USB_OTG
VBUS
D+
D-
ID
Shield
GND
+5V
PWR_FLAG
C1
4.7u
R1
10k
IC1
MCP1726-3302E_SN
VIN_1
VIN_2
SHDN
GND
VOUT_2
VOUT_1
CDELAY
PWRGD
POWER_LED
C2
1000p
C3
10u
+3.3V
SW1
POWER_SW
Y1
ECS-2033-500-BN-TR3
VDD
TRI-STATE
OUTPUT
GROUND
C6
4.7u
IC2
EPM3064ATC44-7N
I/O/TDI
I/O_1
I/O_2
GND_1
I/O_3
I/O_4
I/O/TMS
I/O_5
VCC_1
I/O_6
GND_2
I/O_21
I/O/TDO
I/O_20
GND_5
VCC_3
I/O_19
I/O_18
I/O/TCK
I/O_17
GND_4
I/O_16
C8
4.7u
R8
68
C4
100p
C5
4.7u
C7
4.7u
J2
INPUTS
J3
OUTPUTS
J4
Conn_ARM_JTAG_SWD_10
VTref
RESET
SWDCLK/TCK
SWDIO/TMS
SWO/TDO
NC/TDI
GNDDetect
R3
R4
R5
10k
R2
22
TCK
TMS
TDO
TDI
Circuit selection
SW2
SW_DIP_x01
SW3
SW4
SW5
SW_B0
SW_B1
SW_B2
SW_B3
POWER_LED
STATUS_LED
R6
R
R7
R
D1
LED
D2
LED
Sheet: /
File: cpld.kicad_sch
Title:
Size: A4
Date:
Rev:
KiCad E.D.A. kicad 6.0.7-f9a2dced07~116~ubuntu22.04.1
Id: 1/1