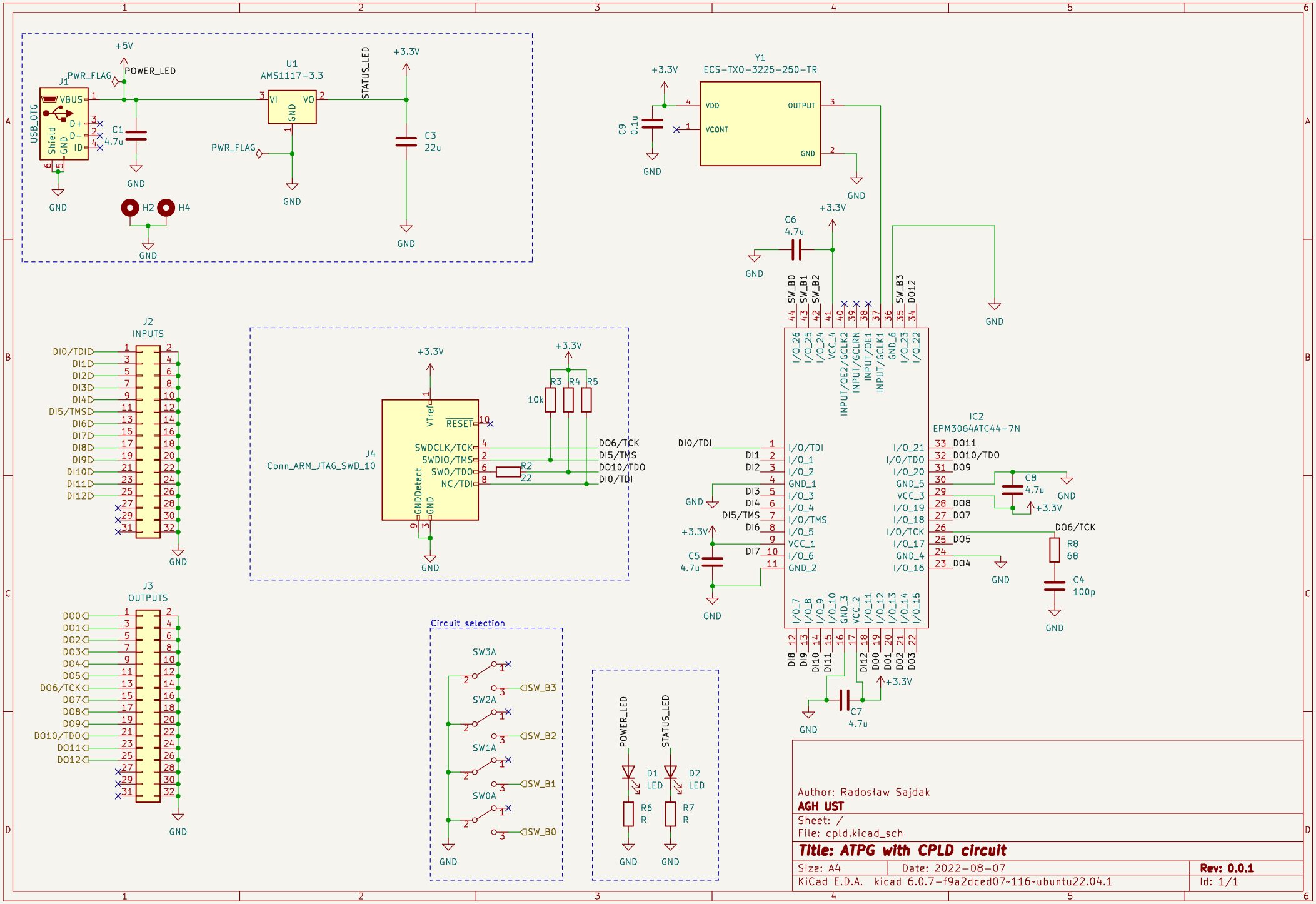
J1
USB_OTG
VBUS
D+
D-
ID
Shield
GND
PWR_FLAG
+5V
POWER_LED
C1
4.7u
U1
AMS1117-3.3
VI
VO
GND
STATUS_LED
+3.3V
C3
22u
H2
H4
Y1
ECS-TXO-3225-250-TR
VDD
VCONT
OUTPUT
C9
0.1u
C6
4.7u
IC2
EPM3064ATC44-7N
C8
4.7u
R8
68
C4
100p
C5
4.7u
C7
4.7u
J2
INPUTS
J3
OUTPUTS
J4
Conn_ARM_JTAG_SWD_10
VTref
RESET
SWDCLK/TCK
SWDIO/TMS
SWO/TDO
NC/TDI
GNDDetect
R2
22
R3
R4
R5
10k
Circuit selection
SW3A
SW2A
SW1A
SW0A
SW_B3
SW_B2
SW_B1
SW_B0
D1
LED
D2
LED
R6
R
R7
R
Author: Radosław Sajdak
AGH UST
Sheet: /
File: cpld.kicad_sch
Title: ATPG with CPLD circuit
Size: A4
Date: 2022-08-07
Rev: 0.0.1
KiCad E.D.A. kicad 6.0.7-f9a2dced07~116~ubuntu22.04.1
Id: 1/1