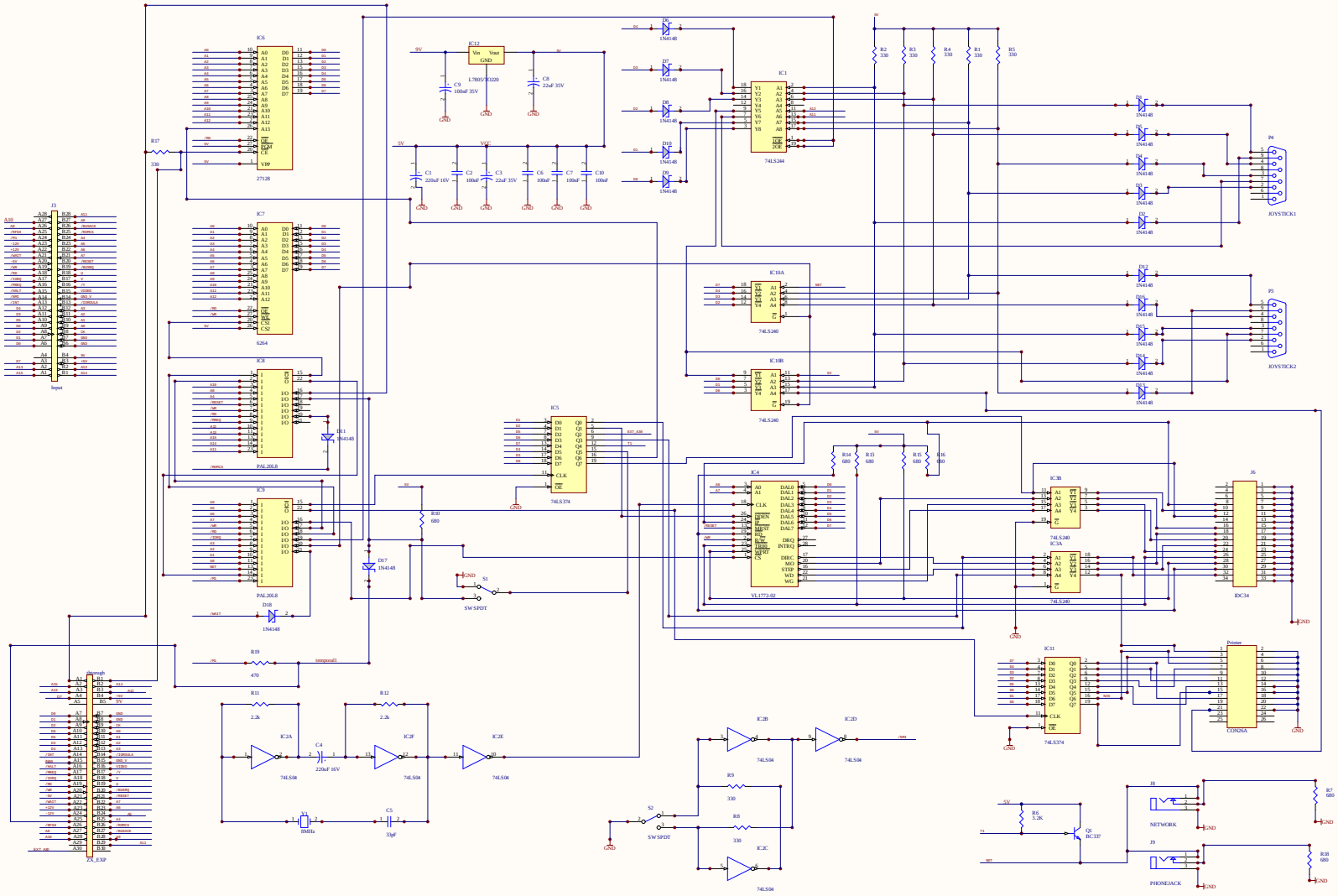

Title		
Size A1	Number	Revision
Date: 12/06/2022	Sheet of	
File: C:\Users\...\2_Completa_nueva.Sch.Sch	Drawn By:	