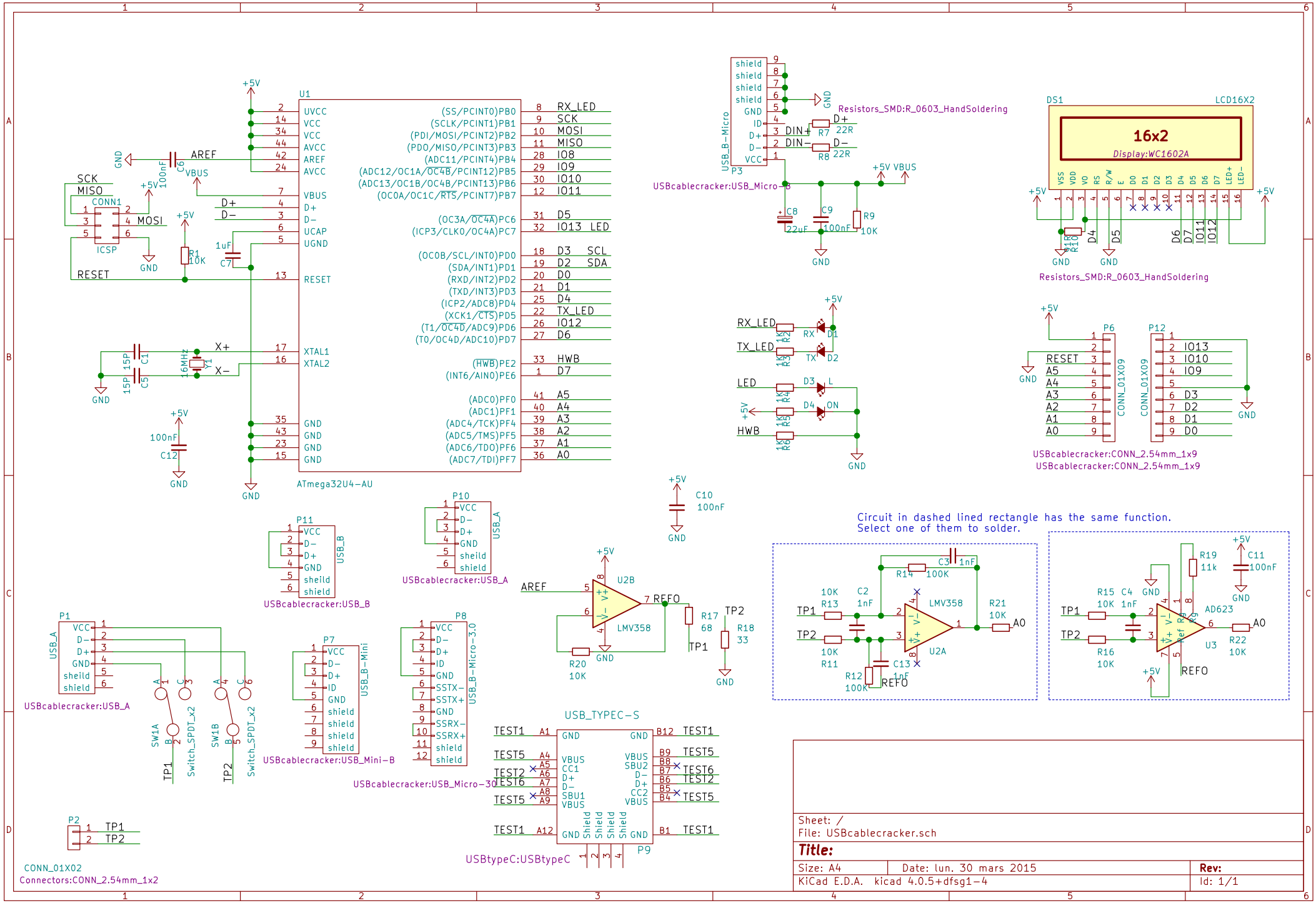
U1
ATmega32U4-AU
UVCC
VCC
VCC
AVCC
AREF
AVCC
VBUS
D+
D−
UCAP
UGND
RESET
XTAL1
XTAL2
GND
GND
GND
GND
(SS/PCINT0)PB0 8 RX_LED
(SCLK/PCINT1)PB1 9 SCK
(PDI/MOSI/PCINT2)PB2 10 MOSI
(PDO/MISO/PCINT3)PB3 11 MISO
(ADC11/PCINT4)PB4 28 IO8
(ADC12/OC1A/OC4B/PCINT12)PB5 29 IO9
(ADC13/OC1B/OC4B/PCINT13)PB6 30 IO10
(OC0A/OC1C/RTS/PCINT7)PB7 12 IO11
(OC3A/OC4A)PC6 31 D5
(ICP3/CLK0/OC4A)PC7 32 IO13 LED
(OC0B/SCL/INT0)PD0 18 D3 SCL
(SDA/INT1)PD1 19 D2 SDA
(RXD/INT2)PD2 20 D0
(TXD/INT3)PD3 21 D1
(ICP2/ADC8)PD4 25 D4
(XCK1/CTS)PD5 22 TX_LED
(T1/OC4D/ADC9)PD6 26 IO12
(T0/OC4D/ADC10)PD7 27 D6
(HWB)PE2 33 HWB
(INT6/AIN0)PE6 1 D7
(ADC0)PF0 41 A5
(ADC1)PF1 40 A4
(ADC4/TCK)PF4 39 A3
(ADC5/TMS)PF5 38 A2
(ADC6/TDO)PF6 37 A1
(ADC7/TDI)PF7 36 A0
SCK
MISO
MOSI
RESET
CONN1
ICSP
AREF
VBUS
D+
D−
X+
X−
16MHz
Y1
C1 15P
C5 15P
C6 100nF
C7 1uF
C12 100nF
R1 10K
+5V
P3
USB_B−Micro
USBcablecracker:USB_Micro−B
shield
GND
ID
D+
D−
VCC
DIN+
DIN−
R7 22R
R8 22R
Resistors_SMD:R_0603_HandSoldering
+5V VBUS
C8 22uF
C9 100nF
R9 10K
DS1
LCD16X2
16x2
Display:WC1602A
VSS VDD VO RS R/W E D0 D1 D2 D3 D4 D5 D6 D7 LED+ LED−
R10 R11
D4 D5 D6 D7 IO11 IO12
Resistors_SMD:R_0603_HandSoldering
RX_LED
TX_LED
LED
HWB
R2 1K
R3 1K
R4 1K
R5 1K
R6 1K
RX D1
TX D2
D3 L
D4 ON
P6
CONN_01X09
RESET
A5
A4
A3
A2
A1
A0
P12
CONN_01X09
IO13
IO10
IO9
D3
D2
D1
D0
USBcablecracker:CONN_2.54mm_1x9
USBcablecracker:CONN_2.54mm_1x9
C10 100nF
P11
USB_B
VCC
D−
D+
GND
sheild
shield
USBcablecracker:USB_B
P10
USB_A
USBcablecracker:USB_A
AREF
U2B
LMV358
REFO
R17 68
R18 33
TP2
TP1
R20 10K
P1
USB_A
USBcablecracker:USB_A
SW1A
SW1B
Switch_SPDT_x2
P7
USB_B−Mini
USBcablecracker:USB_Mini−B
P8
USB_B−Micro−3.0
VCC
D−
D+
ID
GND
SSTX−
SSTX+
SSRX−
SSRX+
shield
USBcablecracker:USB_Micro−30
USB_TYPEC−S
TEST1 A1
TEST5 A4
TEST2 A6
TEST6 A7
TEST5 A9
TEST1 A12
GND
VBUS
CC1
D+
D−
SBU1
SBU2
CC2
Shield
B12 TEST1
B9 TEST5
B8 TEST6
B7 TEST2
B6 TEST5
B1 TEST1
P9
USBtypeC:USBtypeC
Circuit in dashed lined rectangle has the same function.
Select one of them to solder.
C3 1nF
R14 100K
10K R13
C2 1nF
TP1
TP2
10K R11
LMV358
R21 10K
A0
U2A
C13 1nF
R12 100K
REFO
R19 11k
C11 100nF
R15 10K
C4 1nF
R16 10K
AD623
U3
R22 10K
P2
CONN_01X02
Connectors:CONN_2.54mm_1x2
Sheet: /
File: USBcablecracker.sch
Title:
Size: A4
Date: lun. 30 mars 2015
Rev:
KiCad E.D.A. kicad 4.0.5+dfsg1−4
Id: 1/1