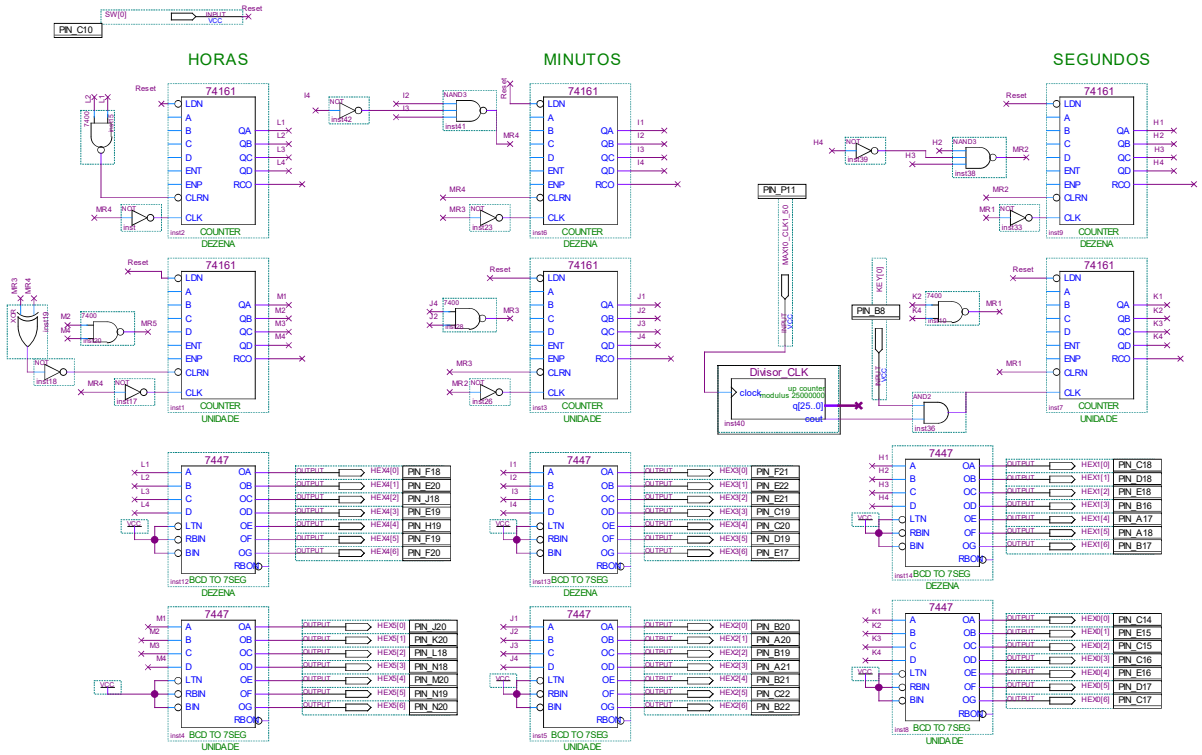
PIN_C10
SW[0]
INPUT
VCC
Reset
HORAS
MINUTOS
SEGUNDOS
74161
COUNTER
DEZENA
UNIDADE
7447
BCD TO 7SEG
PIN_P11
MAX10_CLK1_50
PIN_B8
KEY[0]
Divisor_CLK
clock
up_counter
modulus 25000000
q[25..0]
cout
PIN_F18
PIN_E20
PIN_J18
PIN_E19
PIN_H19
PIN_F19
PIN_F20
PIN_F21
PIN_E22
PIN_E21
PIN_C19
PIN_C20
PIN_D19
PIN_E17
PIN_C18
PIN_D18
PIN_E18
PIN_B16
PIN_A17
PIN_A18
PIN_B17
PIN_J20
PIN_K20
PIN_L18
PIN_N18
PIN_M20
PIN_N19
PIN_N20
PIN_B20
PIN_A20
PIN_B19
PIN_A21
PIN_B21
PIN_C22
PIN_B22
PIN_C14
PIN_E15
PIN_C15
PIN_C16
PIN_E16
PIN_D17
PIN_C17