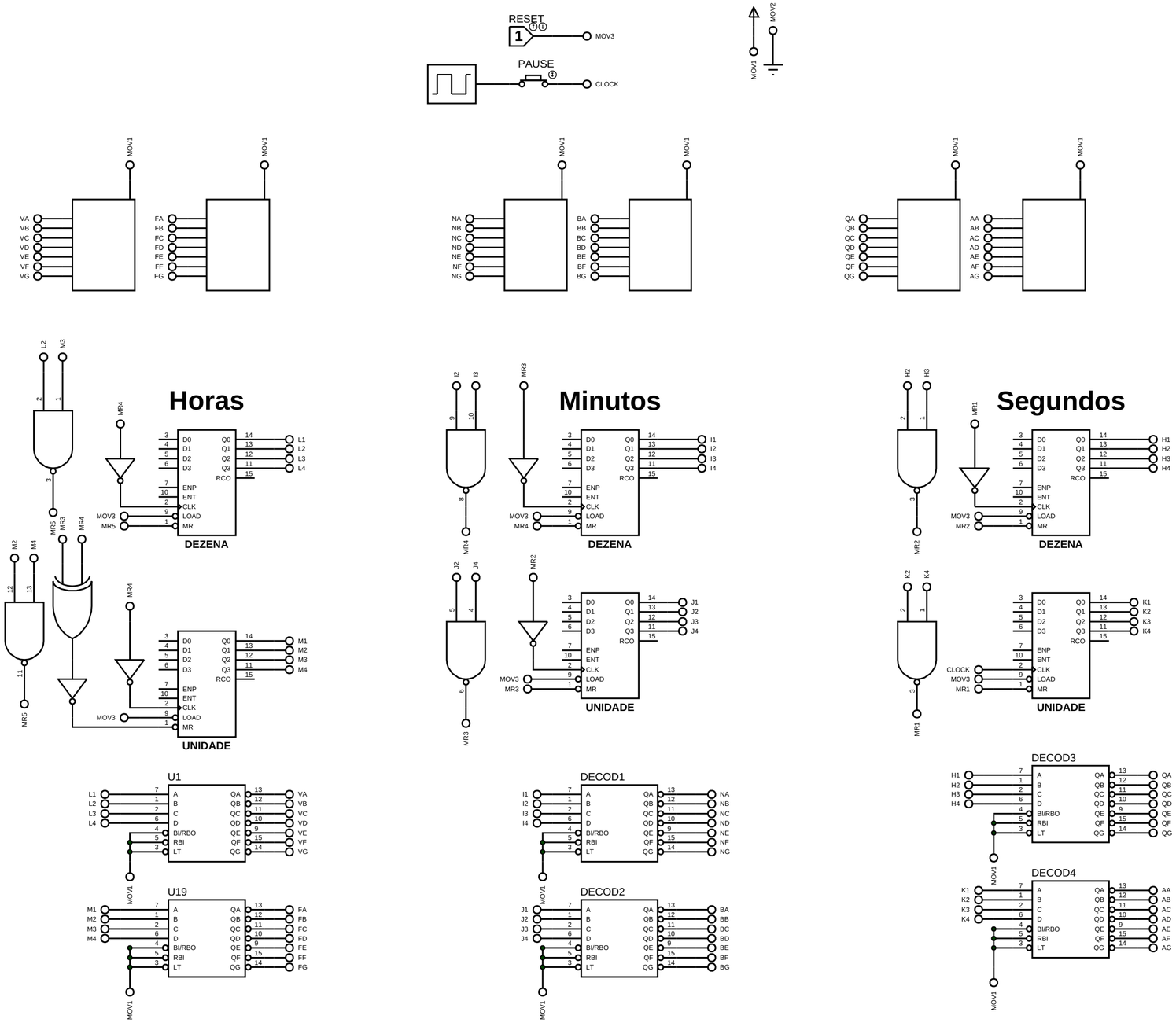
RESET
MOV3
PAUSE
CLOCK
MOV1
MOV2
Horas
Minutos
Segundos
DEZENA
UNIDADE
U1
U19
DECOD1
DECOD2
DECOD3
DECOD4
D0 D1 D2 D3 Q0 Q1 Q2 Q3 RCO
ENP ENT CLK LOAD MR
A B C D BI/RBO RBI LT
QA QB QC QD QE QF QG

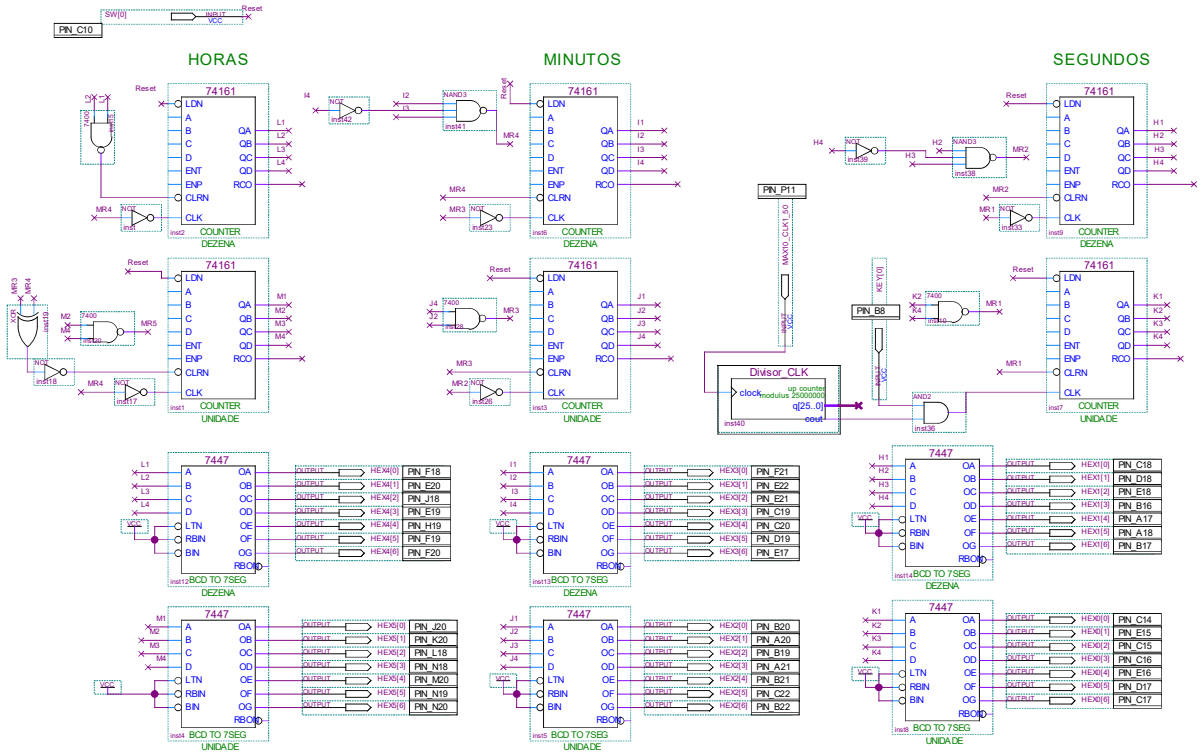
PIN_C10
SW[0]
INPUT
VCC
Reset
HORAS
MINUTOS
SEGUNDOS
74161
COUNTER
DEZENA
UNIDADE
7447
BCD TO 7SEG
PIN_P11
MAX10_CLK1_50
PIN_B8
KEY[0]
Divisor_CLK
clock
up_counter
modulus 25000000
q[25..0]
cout
PIN_F18
PIN_E20
PIN_J18
PIN_E19
PIN_H19
PIN_F19
PIN_F20
PIN_F21
PIN_E22
PIN_E21
PIN_C19
PIN_C20
PIN_D19
PIN_E17
PIN_C18
PIN_D18
PIN_E18
PIN_B16
PIN_A17
PIN_A18
PIN_B17
PIN_J20
PIN_K20
PIN_L18
PIN_N18
PIN_M20
PIN_N19
PIN_N20
PIN_B20
PIN_A20
PIN_B19
PIN_A21
PIN_B21
PIN_C22
PIN_B22
PIN_C14
PIN_E15
PIN_C15
PIN_C16
PIN_E16
PIN_D17
PIN_C17