Q.P. Code: 25REG23110029/A

Rajiv Gandhi University of Knowledge Technologies-Andhra Pradesh
E1-Sem1 End Semester Regular (2023 batch) Examinations, Nov-25
23EE1109-Basic Electrical and Electronics Engineering
(Common to CSE, ME)

Time: 3 hours Student I.D No.: R230472 Max Marks: 60

Part – A

Answer all the following Questions. Each question carries 3 marks 6X3= 18 Marks

1 Calculate the branch currents i_1, i_2 and i_3. **3M**

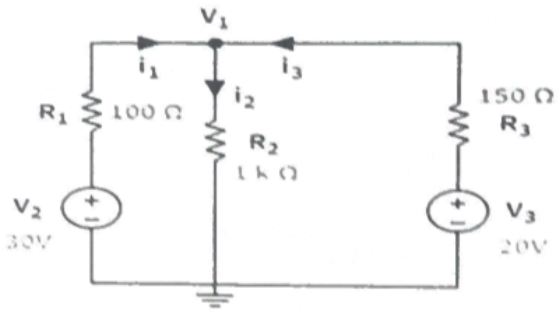

2 Write the Comparison between Star and Delta Systems. **3M**

3 A shunt generator running at 500 rpm delivers 50 kW at 200 V. The armature and Field resistances are 0.02 Ω and 40 Ω respectively. Calculate generated emf if brush Drop of 1 V per brush. **3M**

4 Determine the frequency of emf of the rotor if it is operating at speed 1710 rpm. The supply voltage and frequency of the three phase four poles induction motor are 440 V and 60 HZ respectively. **3M**

5 Write the Applications of a PN Junction Diode. **3M**

6 Write the Comparison between PNP and NPN transistors? **3M**

Part – B

Answer all the following Questions. Each question carries 7 marks 6X7= 42 Marks

UNIT-1

1 Determine the equivalent resistance between terminals A and B **7M**

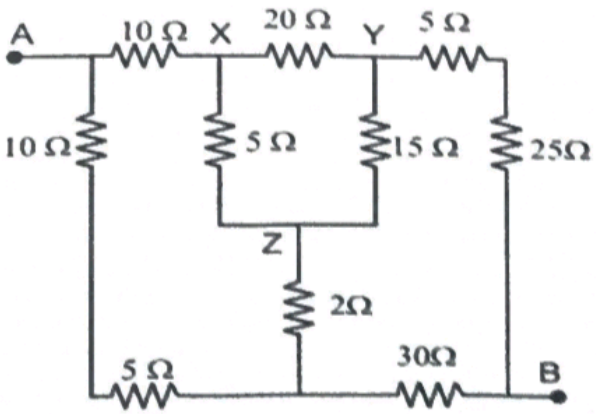

(OR)

2 (a) State and explain super position theorem. 3M

(b) Solve the mesh and branch currents shown in figure. 4M

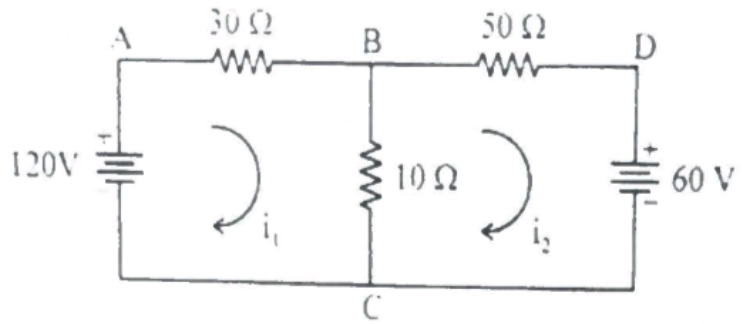

UNIT-2

3 A resistance 12 Ω, an inductance of 0.15 H and a capacitance of 100 μF are Connected in series across a 100 V, 50 Hz supply. Calculate: (i) The current. (ii) The phase difference between current and the supply voltage. (iii) Power consumed. 7M

(OR)

4 Explain the concept of series R-L-C resonance circuit & derive the Condition for Series Resonance? 7M

UNIT-3

5 (a) Derive the EMF equation developed in DC generator. 4M

(b) A shunt generator supplied 500 A at 500 V. Calculate its generated e.m.f. if its Armature and shunt field resistances are 0.02 Ω and 125 Ω respectively. 3M

(OR)

6 What is the necessity of a starter? Explain working of a 3 point starter with a neat Diagram. 7M

UNIT-4

7 Calculate the efficiency at half, full load of a 100 KVA transformer for power factor of Unity and 0.8. The copper loss is 1000 W at full load and iron loss is 1000 W. 7M

(OR)

8 (a) Explain the torque-slip characteristics of an Induction motor? 4M

(b) A four-pole, three-phase, 50 Hz induction motor rotates at a speed of 1440 rpm. Calculate its slip in percentage. Also calculate the frequency of the induced EMF In the rotor circuit. 3M

UNIT-5

9 Explain the working of a Zener diode, draw its V-I Characteristics & also write its applications? 7M

(OR)

10 Explain the operation of full wave bridge rectifier with necessary waveforms. 7M

UNIT-6

11 Draw the circuit diagram of any Transistor configuration and explain the operation, draw its characteristics? 7M

(OR)

12 Explain how transistor is used as an amplifier with necessary diagram. 7M

******* THE END *******

Q.P. Code: 25REG231120041/A

Rajiv Gandhi University of Knowledge Technologies-Andhra Pradesh

E1-Sem1 End Semester Regular (2023 batch) Examinations, Nov-25

23MA1102/25MA1102-Calculus & Linear Algebra

(Common to CSE, AI & ML)

Time: 3 hours Student I.D No.: R230472 Max Marks: 60

Part – A

Answer all the following Questions. Each question carries 3 marks **6X3= 18 Marks**

1 Solve the Differential equation $\frac{dy}{dx} = cos(x+y) + \sin(x+y)$ **3M**

2 if $x^y = y^x$ then find $\frac{dy}{dx}$ **3M**

3 If $f(x,y) = 2x^3 + 3y^3 - 4x^2y$ then, find the maximum absolute error in the linear approximation of Taylor series polynomial in the region $|x-1| < 0.01, |y-2| < 0.1$ **3M**

4 A flat circular plate is heated so that the temperature at any point (x, y) is $f(x, y) = x^2 + 2y^2 - x$ Find the coldest point on the plate. **3M**

5 Find the Eigen values of $3A^3 + 5A^2 - 6A + 2I$ where $A = \begin{bmatrix} 1 & 2 & -3 \\ 0 & 3 & 2 \\ 0 & 0 & -2 \end{bmatrix}$ **3M**

6 Evaluate $\Delta^3(1-x)(1-2x)(1-3x)$ if h=2 **3M**

Part – B

Answer all the following Questions. Each question carries 7 marks **6X7= 42 Marks**

UNIT-1

1 Solve the Differential equation $\frac{dy}{dx} = \frac{x+y-2}{y-x-4}$ **7M**

(OR)

2 Solve the Differential equation $(1+y^2) + \left(x - e^{tan^{-1}y}\right)\frac{dy}{dx} = 0$ **7M**

UNIT-2

3 If $f(x,y) = \begin{cases} \frac{xy(x^2-y^2)}{x^2+y^2} & ;(x,y) \neq (0,0) \\ 0 & ;(x,y) = (0,0) \end{cases}$ Then Show that f is continuous and differentiable at (0,0) **7M**

(OR)

4 If $u = x^2 - 2xy$, $v = x + y + z$, $w = x - 2y + 3z$, show that $\frac{\partial(u,v,w)}{\partial(x,y,z)} * \frac{\partial(x,y,z)}{\partial(u,v,w)} = 1$ **7M**

UNIT-3

5 Expand $e^{-x}logy$ as a Taylor's series in powers of x and y−1 upto third degree terms. **7M**

(OR)

6 Split 24 into three parts such that continued product of the first, square of the second and cube of the third may be minimum. **7M**

UNIT-4

7 Let P_3 be the space of real polynomial of degree at most 3. Let $W_1=\{f(x)/f(1)=0\}$ and $W_2=\{f(x)/f^1(1)=0\}$ then find basis and dimensions of W_1, W_2, W_1+W_2 **7M**

(OR)

8 If $T: V_3 \rightarrow V_2$ defined by $T(x,y,z)=(3x+2y-4z\,,\,x-5y+3z)$ find the matrix of T, w.r.to basis $B_1=\{(1,1,1),(1,1,0),(1,0,0)\}$ & $B_2=\{(1,3),(2,5)\}$. **7M**

UNIT-5

9 Find the Eigen values and Eigen vectors of the matrix $A = \begin{bmatrix} 1 & 2 & -2 \\ 1 & 1 & 1 \\ 1 & 3 & -1 \end{bmatrix}$ **7M**

(OR)

10 If $A = \begin{bmatrix} 6 & 2 & -1 \\ -6 & -1 & 2 \\ 7 & 2 & -2 \end{bmatrix}$ by using Cayley Hamilton theorem express the polynomial $A^8-3A^7-4A^6+12A^5+3A^4-9A^3+2A+3I$ as a linear polynomial in A **7M**

UNIT-6

11 Find the positive root of the equation $e^x = 3x$ by using Regula-False method. **7M**

(OR)

12 From the following table, estimate the number of students who obtained marks between 40 and 45: **7M**

Marks:	30—40	40—50	50—60	60—70	70—80
No. of students:	31	42	51	35	31

***** **THE END** *****

Q.P. Code: 25REG23112009/A

Rajiv Gandhi University of Knowledge Technologies-Andhra Pradesh
E1-Sem1 End Semester Regular (2023 batch) Examinations, Nov-25
23CS1101-Problem Solving and Programming Through C
(Computer Science and Engineering)

Time: 3 hours Student I.D No.: R230472 Max Marks: 60

Part – A

Answer all the following Questions. Each question carries 3 marks 6X3= 18 Marks

1 Explain Type Conversion and Casting with examples. 3M
2 Differentiate while loop, for loop, and do-while loop with examples. 3M
3 Explain Array of Strings in detail. 3M
4 What is Recursion? Explain Direct and Indirect Recursion. 3M
5 Write a program for multiplication of two numbers using command-line arguments. 3M
6 Explain Enumerated Type in detail. 3M

Part – B

Answer all the following Questions. Each question carries 7 marks 6X7= 42 Marks

UNIT-1

1 A) Explain Computing Environments with examples 4M
B) Explain Creating and Running a Program with a pictorial representation 3M

(OR)

2 A) Explain all the C Data Types in detail. 3M
B) Explain all the Bitwise Operations in detail. 4M

UNIT-2

3 A) Explain break, continue, and goto statements. 3M
B) Explain nested if-else statements with examples 4M

(OR)

4 Create a menu for all the Relational Operations using a switch case 7M

UNIT-3

5 A) Write a program for multiplication of two matrices. 4M
B) Write any applications of arrays. 3M

(OR)

6 Explain any '7' string manipulation functions without using in-built functions. 7M

UNIT-4

7 Explain all the preprocessor commands in detail. 7M

(OR)

8 Define function. Explain all inter-function communication in detail. 7M

UNIT-5

9 A) Explain pointer arithmetic in detail. 3M
B) Explain call by reference for bi-directional communication. 4M

(OR)

10 Explain dynamic memory allocation in detail 7M

UNIT-6

11 Write and Read 5 employs data(ID, NAME, SALARY) using pointer structure. 7M

(OR)

12 Write a C program to read 3 student records (Roll number, Name, Percentage) from a binary file. 7M

******* THE END *******

Q.P. Code: 25REG23110061/A

Rajiv Gandhi University of Knowledge Technologies-Andhra Pradesh
E1-Sem1 End Semester Regular (2023 batch) Examinations, Nov-25

23HS1101, 25HS1101-Indian Constitution
(Common to CSE, AI & ML, ME)

Time: 3 hours Student I.D No.: R230472 Max Marks: 100

Part – A

Answer all the following Questions. Each question carries one mark. 28 X 1 = 28 Marks

1 The Constitution of India came into effect on:

A 2nd October 1950 B 26th January 1950

C 26th November 1949 D 15th August 1947

2 The phrase "We, the People of India" in the Preamble signifies:

A Power of Parliament B Authority of the President

C Popular Sovereignty D Judicial Supremacy

3 The first temporary chairperson of the Constituent Assembly was:

A Dr. Rajendra Prasad B Dr. B.R. Ambedkar.

C Jawaharlal Nehru D Sachidanand Sinha

4 The Fundamental Rights in the Indian Constitution were inspired by:

A United Kingdom B United States

C Ireland D France

5 Article 14 ensures:

A Equal outcomes for all B Same privileges for all citizens

C Equal protection of laws D Absolute freedom

6 Directive Principles aim to establish:

A Political democracy B Religious equality

C Judicial independence D Economic and social justice

7 Fundamental Duties were added to the Constitution during the:

A Emergency Period (1975–77) B Liberalization Period

C Green Revolution D Post-Independence decade

8 The term "Union of States" in the Constitution indicates:

A Federation of equal powers B Indestructible Union of destructible States

C Loose confederation D Unitary form of government

9 The real executive authority at the national level rests with the:

A President B Parliament

C Prime Minister D Cabinet Secretary

10 Who among the following is eligible to be the President of India?

A Any citizen of India above 35 years
B Any citizen of India above 25 years
C Any member of Parliament
D Any former Chief Minister

11 The Vice-President of India functions as the ex-officio:

A Chairman of Rajya Sabha
B Chairman of Lok Sabha
C Cabinet Secretary
D Chief Justice of India

12 One-third of the members of the Council of States retire every:

A 2 years
B 4 years
C 6 years
D 5 years

13 Money Bills can be introduced only in the:

A Rajya Sabha
B Lok Sabha
C Either House
D Joint Sitting

14 The President of India takes oath of office before the:

A Chief Justice of India
B Prime Minister
C Speaker of Lok Sabha
D Vice-President

15 The Supreme Court of India was inaugurated on:

A 28 January 1950
B 15 August 1947
C 1 March 1952
D 26 January 1950

16 The total sanctioned strength of the Supreme Court (including the Chief Justice) is currently

A 25
B 30
C 34
D 40

17 The High Court of a State is headed by the:

A Chief Minister
B Chief Justice
C Governor
D Advocate General

18 The Governor of a State is appointed by the:

A Chief Minister
B Chief Justice
C Prime Minister
D President of India

19 Which of the following is not a function of the Election Commission of India?

A Conduct of elections
B Internal functioning of political parties
C Preparation of electoral rolls
D Appointment of Governors

20 The right to life and personal liberty in India ensures:

A Freedom to trade
B Freedom to live with dignity
C Freedom of expression only dignity
D Freedom to form associations

21 The body responsible for recommending the distribution of financial resources between the

Union and States is:

A Planning Commission

B Finance Commission

C NITI Aayog

D Reserve Bank of India

22 The ex-officio Chairperson of NITI Aayog is the: \

A President

B Finance Minister

C Vice-President

D Prime Minister

23 Judges of the Supreme Court hold office until the age of:

A 60 years

B 62 years

C 65 years

D 70 years

24 Judicial Review refers to the power of the Supreme Court to:

A Make new laws

B Suspend fundamental rights

C Enforce laws

D Declare laws unconstitutional

25 Which writ is issued to release a person who is unlawfully detained?

A Habeas Corpus

B Mandamus

C Certiorari

D Prohibition

26 Judicial independence is protected because:

A Judges can be dismissed easily

B Parliament decides their salary

C Their salaries are charged on the Consolidated Fund

D They are answerable to the Executive

27 Public Interest Litigation (PIL) is closely linked to:

A Judicial Activism

B Judicial Restraint

C Parliamentary Privilege

D Rule of Law

28 The Constitution of India can be amended through a formal:

A Presidential Order

B Judicial Verdict

C Parliamentary Amendment Process

D Executive Notification

Q.P. Code: 25REG23110061/A

Rajiv Gandhi University of Knowledge Technologies-Andhra Pradesh
E1-Sem1 End Semester Regular (2023 batch) Examinations, Nov-25
23HS1101, 25HS1101-Indian Constitution
(Common to CSE, AI & ML, ME)

Time: 3 hours Student I.D No.: R230472 Max Marks: 100

Part – B

Answer all the following Questions. Each question carries Twelve marks 6X12= 72 Marks

UNIT-1

1 "The Preamble serves as the identity card of the Indian Constitution." Critically analyze this statement by explaining the significance of the Preamble. **12M**

(OR)

2 Examine the role of the Directive Principles of State Policy in promoting social and economic justice in India. **12M**

UNIT-2

3 Describe the composition, powers, and functioning of the Indian Parliament. In what ways does it uphold the principle of accountability of the Executive? **12M**

(OR)

4 Discuss the constitutional role and powers of the Prime Minister in relation to the President and the Council of Ministers. How does the Prime Minister influence the policy-making process in India? **12M**

UNIT-3

5 Explain the organizational structure and key functions of the State Secretariat under the Indian Constitution. **12M**

(OR)

6 Why is the appointment of the Governor often criticized in Indian federalism? Analyze the constitutional provisions and political implications surrounding the Governor's role. **12M**

UNIT-4

7 Define the concept of Judicial Review in the Indian context. Evaluate its significance in safeguarding constitutional supremacy. **12M**

(OR)

8 Discuss the evolution and impact of Judicial Activism in India. How has Public Interest Litigation (PIL) contributed to strengthening constitutional governance and protecting citizens' rights? **12M**

UNIT-5

9 Explain the structure and functions of Panchayati Raj Institutions (PRIs) in India. Assess their role in promoting grassroots democracy and rural development. **12M**

(OR)

10 Discuss the structure, powers, and responsibilities of Urban Local Bodies (Municipalities). How do they contribute to strengthening decentralized governance in urban areas? **12M**

UNIT-6

11 Write short notes on: **12M**
(a) Free Legal Aid and Equal Justice
(b) Environmental Protection and Sustainable Development

(OR)

12 Write short notes on: **12M**
(a) State Election Commission
(b) Women's Rights under the Indian Constitution

******* THE END *******