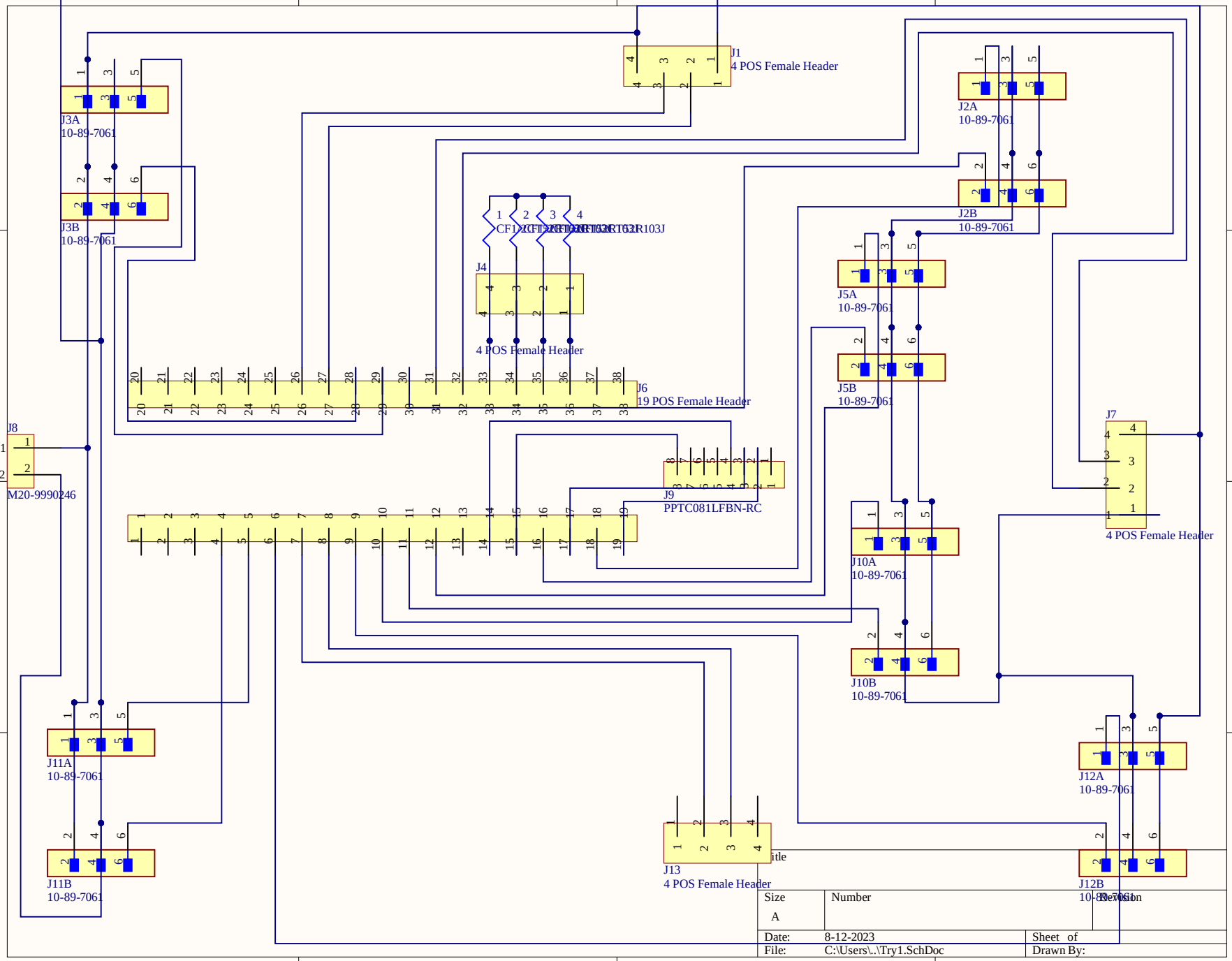
J1
4 POS Female Header
J2A
10-89-7061
J2B
10-89-7061
J3A
10-89-7061
J3B
10-89-7061
J4
4 POS Female Header
J5A
10-89-7061
J5B
10-89-7061
J6
19 POS Female Header
J7
4 POS Female Header
J8
M20-9990246
J9
PPTC081LFBN-RC
J10A
10-89-7061
J10B
10-89-7061
J11A
10-89-7061
J11B
10-89-7061
J12A
10-89-7061
J12B
10-89-7061
J13
4 POS Female Header
Title
Size
A
Number
Revision
Date: 8-12-2023
File: C:\Users\..\Try1.SchDoc
Sheet of
Drawn By: