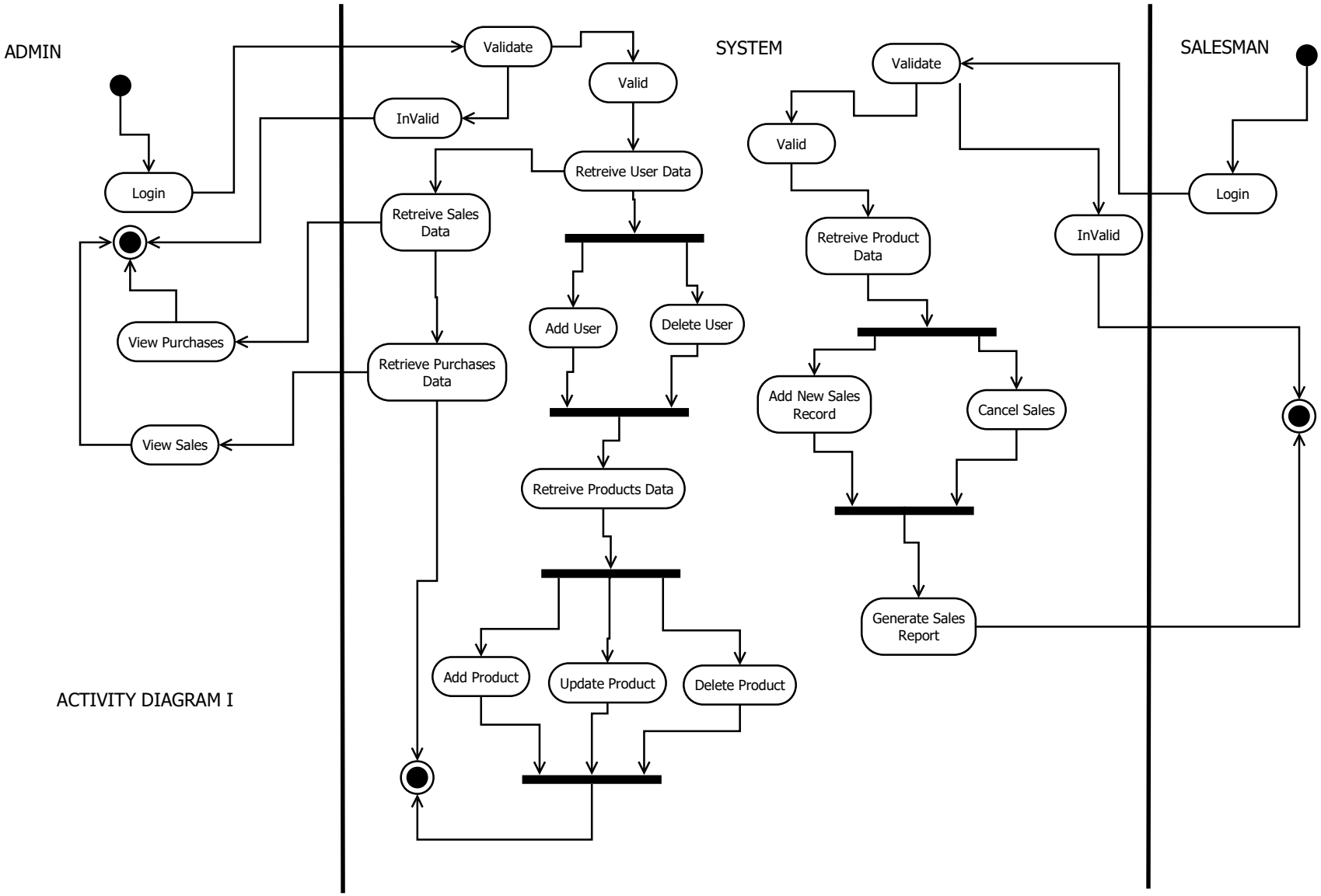

ACTIVITY DIAGRAM I