MICROPROCESSOR & MICROCONTROLLER

Project Report

FIRE SAFETY SYSTEM

Automatic Fire Detection & Suppression System

Submitted By:

1.Md.Jewel Rana [20234103363]
2.Mubashsher Salek [20234103371]
3.Mostafa Monoar [20234103379]
4.Mehedi Hassan [20234103384]
5.Rahmatul Munim [20234103386]

Submitted To:

Fahima Khanam

Assistant Professor, Department of CSE

Bangladesh University of Business and Technology

Date: 16 April 2026

Abstract

This report presents the design and implementation of an Automatic Fire Safety System using a microprocessor-based control unit. The system is designed to detect fire or smoke in a given environment and respond automatically by triggering an alarm and activating a water pump motor to suppress the fire. The primary objective of this project is to develop a low-cost, reliable, and efficient fire safety solution that can be integrated into homes, offices, and industrial environments. The system utilizes a flame sensor and/or smoke sensor (MQ-2) as input devices, a microcontroller (Arduino UNO / 8051) as the processing unit, and an alarm buzzer along with a DC motor-driven water pump as output actuators. The project demonstrates the real-world application of microprocessor interfacing with sensors and actuators.

1. Introduction

Fire is one of the most devastating disasters that can cause significant loss of life and property. Early detection and rapid response to fire incidents are crucial to minimizing damage and ensuring safety. Traditional fire safety systems often rely on manual intervention, which may not be fast enough in emergencies. With advancements in microprocessor technology and embedded systems, it is now possible to build intelligent, automated fire safety systems that can detect and respond to fire without any human intervention.

This project, the Fire Safety System, is designed to automatically detect the presence of fire or smoke and immediately activate two responses:

- Triggering an alarm buzzer to alert people in the vicinity.
- Activating a water pump motor to spray water and extinguish the fire.

This system demonstrates the practical application of microprocessor-based control systems in real-world safety scenarios.

2. Objectives

The main objectives of this project are:

- To design an automatic fire detection system using flame and smoke sensors.
- To implement a microprocessor-based control unit to process sensor data.
- To trigger an audible alarm (buzzer) upon fire detection.
- To activate a motor-driven water pump to suppress the fire automatically.
- To demonstrate the integration of hardware components with a microcontroller.
- To develop a cost-effective and reliable safety system suitable for real-world applications.

3. Components & Materials

3.1 Hardware Components

#	Component	Specification	Quantity	Purpose
1	Microcontroller	Arduino UNO / 8051	1	Main processing unit
2	Flame Sensor	IR-based, 3.3V-5V	1	Detects fire/flame
3	Buzzer	Active Buzzer, 5V	1	Alarm output
4	DC Motor / Pump	5V-12V DC	1	Water pump for fire suppression
5	Relay Module	5V Relay, 10A	1	Switches motor circuit
6	Power Supply	9V/12V DC Adapter	1	Power source
7	Breadboard	Standard 830 tie-point	1	Circuit prototyping
8	Connecting Wires	Jumper wires	As needed	Circuit connections

3.2 Software Tools

- Arduino IDE (for programming the microcontroller)
- Proteus / Tinkercad (for circuit simulation)
- MS Word / Google Docs (for documentation)

4. System Design

4.1 Block Diagram Description

The Fire Safety System consists of three main functional blocks:

1. **Input Block: Flame Sensor and Smoke Sensor (MQ-2)**
2. **Processing Block: Microcontroller (Arduino UNO / 8051)**
3. **Output Block: Buzzer (Alarm) + Motor (Water Pump) + LED Indicators**

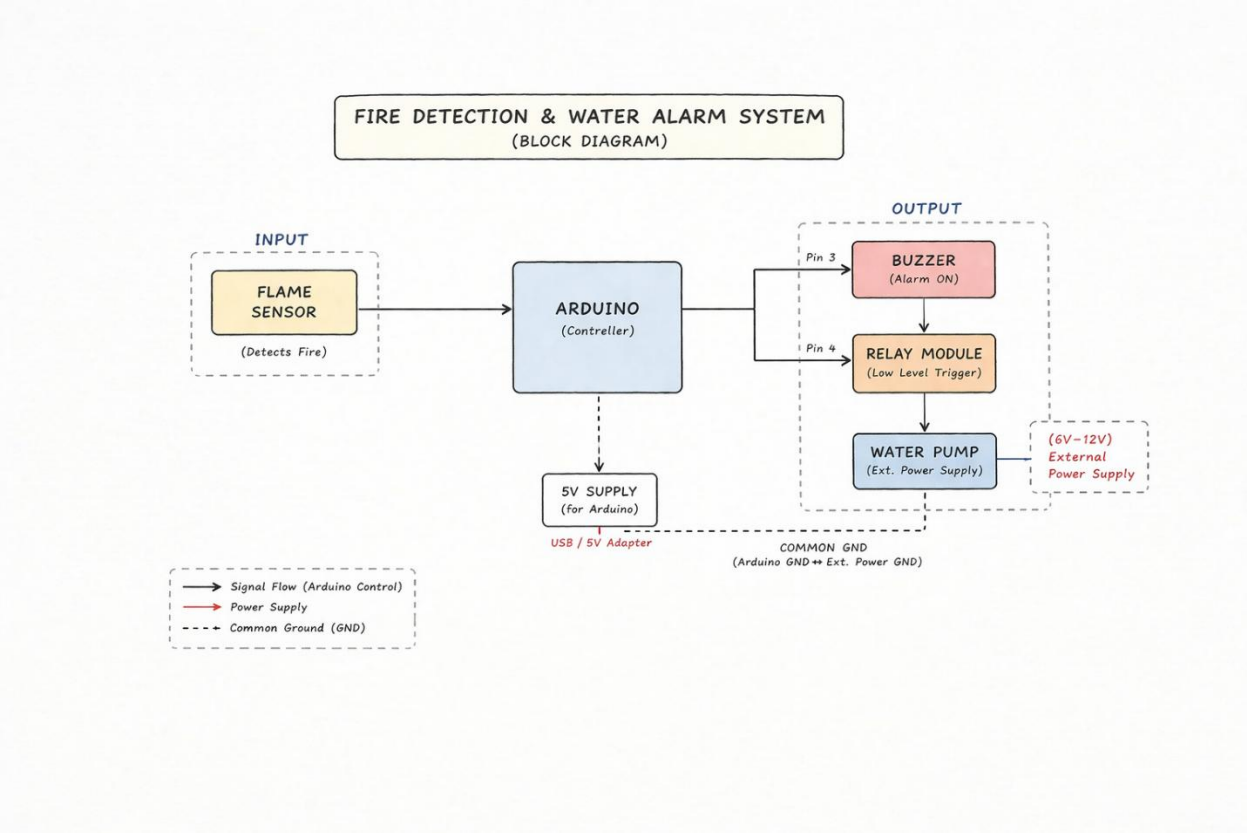

4.2 Circuit Description

The flame sensor is connected to a digital input pin of the microcontroller. It outputs a LOW signal when fire is detected and HIGH when no fire is present. The MQ-2 smoke sensor provides both analog and digital output; the digital output is used for simplicity and connected to another digital input pin. The buzzer is connected to a digital output pin through a current-limiting resistor. The DC water pump motor is controlled via a relay module and motor driver IC (L298N), which is interfaced with the microcontroller's output pins. LED indicators provide visual status — a red LED indicates fire detection and a green LED indicates the system is in safe mode.

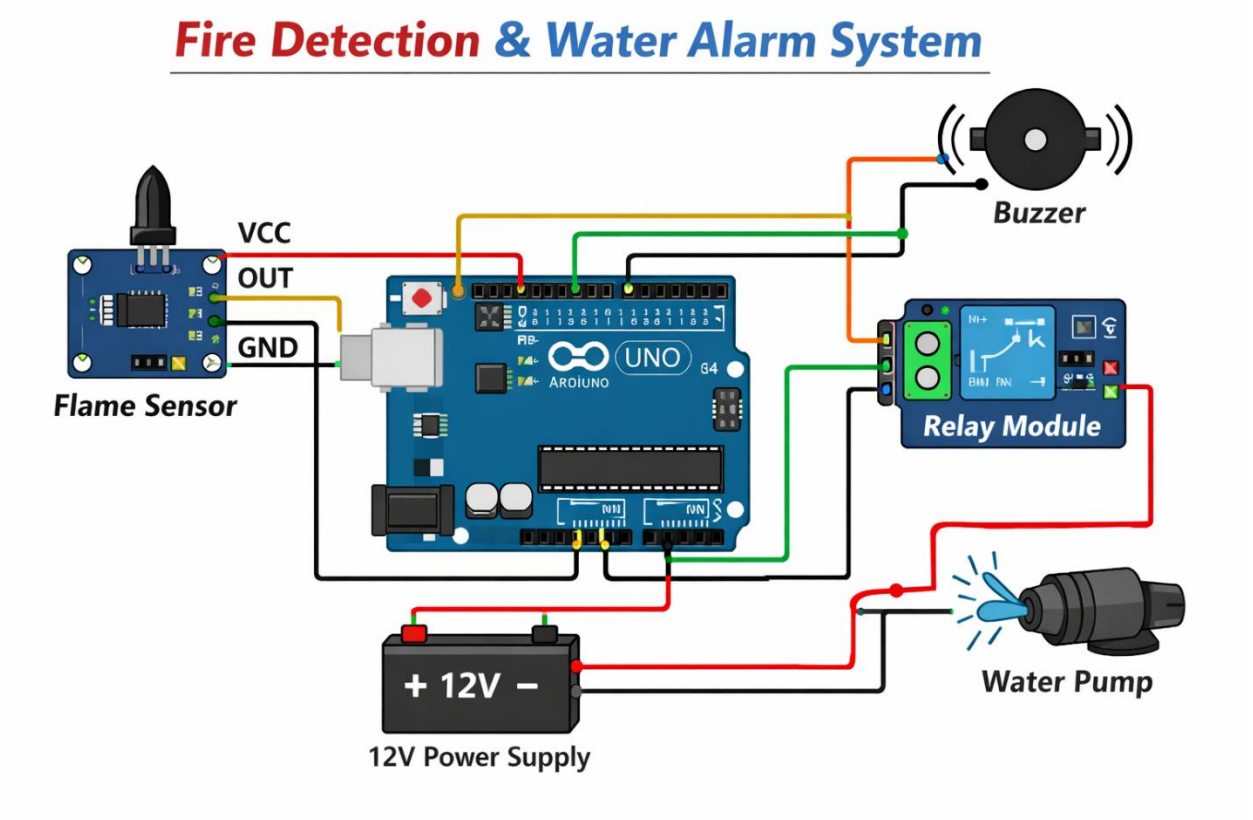

5. Working Principle

5.1 Normal Operation (No Fire)

- The flame sensor and smoke sensor continuously monitor the environment.
- No fire or smoke is detected both sensors output HIGH (inactive).
- The green LED remains ON indicating safe status.

- The buzzer remains OFF and the water pump motor remains OFF.

5.2 Fire Detection (Fire/Smoke Detected)

- When fire is detected, the flame sensor outputs a LOW signal to the microcontroller.
- Simultaneously or independently, the MQ-2 smoke sensor detects smoke/gas.
- The microcontroller receives the LOW signal and processes it immediately.
- The microcontroller sends a HIGH signal to the buzzer alarm is activated.
- The microcontroller sends a control signal to the relay and motor driver.
- The relay switches ON, powering the DC water pump motor.
- The water pump starts pumping water to suppress the fire.
- The red LED turns ON to indicate fire alert status.

5.3 System Reset

- Once the fire/smoke is no longer detected, the sensors output HIGH again.
- The microcontroller processes this and turns OFF the buzzer and motor.
- The system returns to normal monitoring mode automatically.

6. System Flowchart

Step	Action	Condition	Output
1	System Start	Power ON	Initialize all pins
2	Read Flame Sensor	Fire detected?	If YES → Step 4
3	Read Smoke Sensor	Smoke detected?	If YES → Step 4
4	Fire Alert Mode	Sensor = LOW	Buzzer ON, Motor ON, Red LED ON
5	Water Pump Active	Fire suppression	Motor pumps water
6	Check Sensors Again	Fire gone?	If YES → Step 7
7	System Reset	No fire/smoke	Buzzer OFF, Motor OFF, Green LED ON

Step	Action	Condition	Output
8	Return to Monitoring	Continuous loop	Go to Step 2

7. Program Code (Arduino)

The following is the Arduino C++ code for the Fire Safety System:

```
// Fire Safety System - Arduino Code
```

```
// Flame Sensor + Smoke Sensor + Buzzer + Motor Pump

#define FLAME_SENSOR  2   // Digital pin D2
#define SMOKE_SENSOR  3   // Digital pin D3
#define BUZZER        4   // Digital pin D4
#define MOTOR_RELAY   5   // Digital pin D5
#define RED_LED      6   // Digital pin D6
#define GREEN_LED    7   // Digital pin D7

void setup() {
  pinMode(FLAME_SENSOR, INPUT);
  pinMode(SMOKE_SENSOR, INPUT);
  pinMode(BUZZER, OUTPUT);
  pinMode(MOTOR_RELAY, OUTPUT);
  pinMode(RED_LED, OUTPUT);
  pinMode(GREEN_LED, OUTPUT);
  digitalWrite(GREEN_LED, HIGH); // Safe mode
}

void loop() {
  int flame = digitalRead(FLAME_SENSOR);
  int smoke = digitalRead(SMOKE_SENSOR);

  if (flame == LOW || smoke == LOW) {
    // Fire or Smoke Detected!
    digitalWrite(BUZZER, HIGH);      // Alarm ON
    digitalWrite(MOTOR_RELAY, HIGH); // Pump ON
    digitalWrite(RED_LED, HIGH);     // Red LED ON
    digitalWrite(GREEN_LED, LOW);    // Green LED OFF
  } else {
    // No Fire - Safe Mode
    digitalWrite(BUZZER, LOW);       // Alarm OFF
    digitalWrite(MOTOR_RELAY, LOW);  // Pump OFF
    digitalWrite(RED_LED, LOW);      // Red LED OFF
    digitalWrite(GREEN_LED, HIGH);   // Green LED ON
  }
}
```

8. Results & Discussion

The Fire Safety System was tested under controlled conditions to verify its functionality and response time. The following observations were recorded:

Test Case	Sensor Input	Buzzer	Water Pump	Result
Normal Condition	No flame, No smoke	OFF	OFF	PASS ✓
Flame Detection	Flame sensor = LOW	ON	ON	PASS ✓
Smoke Detection	Smoke sensor = LOW	ON	ON	PASS ✓
Both Sensors Triggered	Flame + Smoke = LOW	ON	ON	PASS ✓
Fire Extinguished	Sensors return HIGH	OFF	OFF	PASS ✓

The system successfully detected fire and smoke in all test cases. The alarm response time was measured to be under 1 second from detection, and the water pump was activated simultaneously. Upon removal of the fire source, the system automatically reset to normal monitoring mode without any manual intervention.

9. Advantages & Limitations

9.1 Advantages

- Fully automatic no human intervention required during fire detection.
- Dual-sensor approach (flame + smoke) reduces false negatives.
- Low cost and easy to assemble with commercially available components.
- Fast response time (< 1 second from detection to alarm).
- Scalable can be expanded with more sensors and zones.
- Energy efficient motor and buzzer only activate when needed.

9.2 Limitations

- Limited water supply depends on reservoir/tank capacity.
- May produce false alarms near cooking smoke or steam.
- Not suitable for electrical fires where water is dangerous.
- Sensor range is limited multiple units needed for large areas.
- No wireless notification or GSM alert for remote monitoring.

10. Future Improvements

The following enhancements can be made to improve the system in future iterations:

- GSM Module Integration: Add a SIM800L module to send SMS alerts to the building owner when fire is detected.
- IoT Connectivity: Interface with Wi-Fi (ESP8266/ESP32) for remote monitoring via a smartphone app.
- Temperature Sensor: Add a DHT11/LM35 sensor to monitor temperature threshold-based alerts.
- CO2 Suppression: Replace water pump with CO2 gas release for electrical fire safety.
- Multi-Zone Detection: Implement multiple sensor nodes to cover larger areas.
- LCD Display: Add a 16x2 LCD to display real-time sensor readings and system status.
- Battery Backup: Include a rechargeable battery system for power-cut scenarios.

11. Conclusion

The Fire Safety System successfully demonstrates the application of microprocessor-based embedded systems in real world safety scenarios. By integrating flame and smoke sensors with a microcontroller, buzzer, and motor driven water pump, the system provides an automated, fast, and reliable response to fire emergencies. The project fulfills all the defined objectives and has been tested to operate correctly under various fire conditions.

This project highlights how microprocessor interfacing with sensors and actuators can be leveraged to build intelligent safety systems that protect lives and property. With further development and the addition of IoT capabilities, such a system could be deployed in homes, industries, and public buildings for comprehensive fire protection.

References

4. Arduino Official Documentation. (2024). Arduino UNO Reference. https://www.arduino.cc
5. Floyd, T. L. (2017). Digital Fundamentals (11th ed.). Pearson Education.
6. MQ-2 Smoke Sensor Datasheet. Zhengzhou Winsen Electronics Technology Co., Ltd.
7. Gaonkar, R. S. (2016). Microprocessor Architecture, Programming, and Applications with the 8085 (6th ed.). Prentice Hall.
8. L298N Motor Driver Datasheet. STMicroelectronics. https://www.st.com