Dew Point Sensor

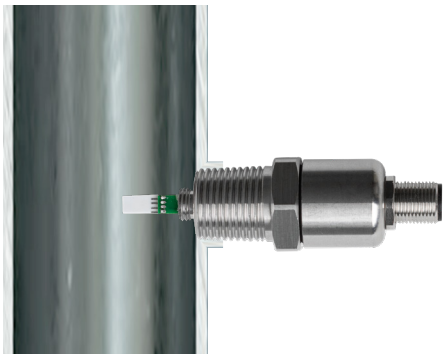

Product Overview:

Humidity and trace moisture monitoring are critical in medical air and industrial compressed air systems, where maintaining an accurate dew point is essential for system safety and performance.

The Dew Point Sensor provides rapid response and precise moisture detection, enabling operators to maintain system control, prevent contamination, and avoid costly downtime or equipment failure.

Technical Specifications

ASICO SYSTEMS

Sensor Technology:

At the core of the sensor is a capacitive polymer-based sensing element featuring:

- Proprietary polymer material for high sensitivity
- Porous, humidity-permeable protective layer
- Excellent long-term stability
- Fast response time to changing moisture conditions

This robust design ensures reliable operation even in harsh environments, including:

- High humidity conditions
- Condensation and dew formation
- Industrial and medical air applications

Mechanical Specifications:

- **Housing Material:** Stainless Steel
- **Process Connection:** 1/2" NPT thread
- **Connector Type:** M12 – 3 Pin Female
- **Cable:** Shielded, UL-listed
- **Cable Length:** 5,000 mm (5 m)
- **Ingress Protection:** Suitable for industrial environments
- **Compliance:** RoHS compliant
- **Cleaning:** Oxygen cleaned for medical air service
- **Weight:** 114 g (4 oz)

Measurement Specifications:

- **Dew Point Range:** -50 °C to +50 °C (-58 °F to +122 °F)
- **Accuracy:** ±2 °C (±3.6 °F)
- **Response Time (t90):** < 4 seconds

Electrical Specifications:

- **Output Signal:** 4-20 mA (Linear Output)
- **Supply Voltage:** 10-30 VDC
- **Wiring Configuration:** 3-wire system

Operating Conditions:

- **Operating Temperature:** -40 °C to +60 °C
- **Operating Humidity:** 0-100% RH

Electrical Connections:

Wire Color Coding:

- **Brown:** Ground (GND)
- **Black:** Signal Output (4-20 mA)
- **Blue:** Power Supply (10-30 VDC)

Key Features

- Fast response for real-time monitoring
- High accuracy across wide dew point range
- Stable performance in harsh environments
- Oxygen-cleaned for medical applications
- Industrial-grade stainless steel construction
- Easy integration with standard 4-20 mA systems

Applications

- Medical air systems (CSA/NFPA 99 compliant environments)
- Hospital pipeline monitoring
- Compressed air systems
- Pharmaceutical and cleanroom environments
- Industrial gas monitoring

Technical Specifications

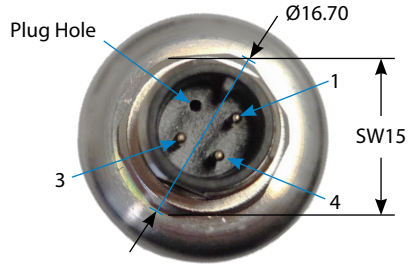

Electrical Connection:

- **Brown:** Ground (GND) (pin 1)
- **Black:** Signal Output (4-20 mA) (pin 4)
- **Blue:** Power Supply (10-30 VDC) (pin 3)

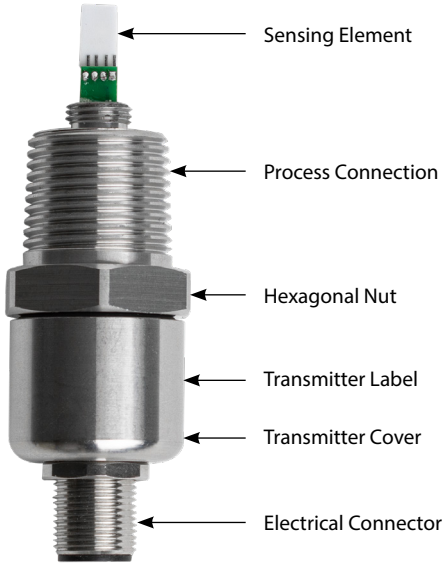

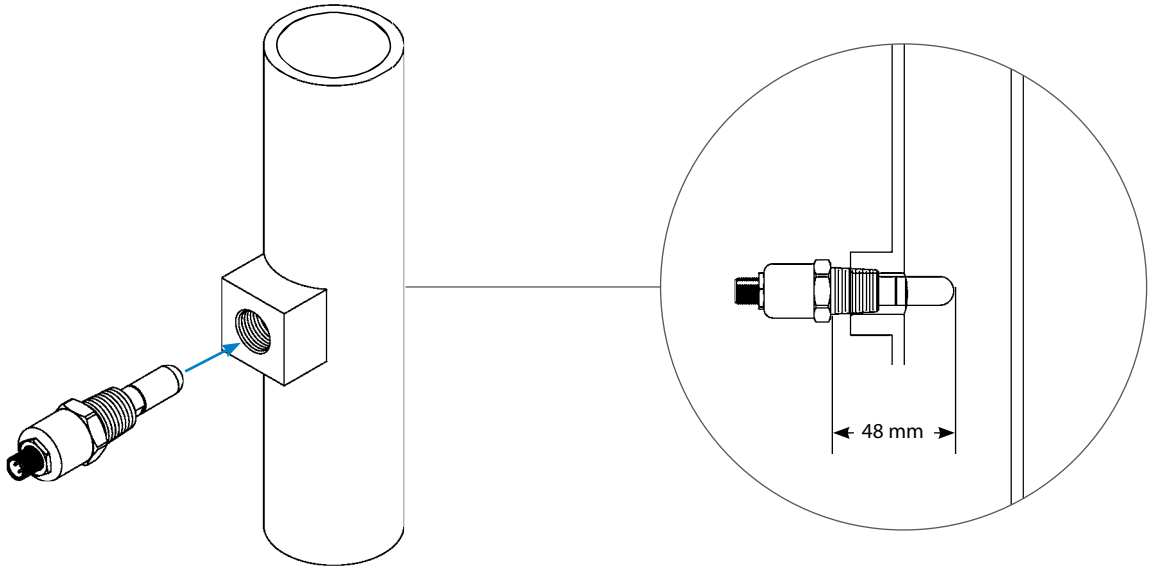

1/2" NPT. Use a suitable sealant e.g. PTFE tape using correct taping procedures.

Model Numbers

AS-DEWPOINT-SENSOR

Description: 3-Wire - 4-20 mA/-50 °C to +50 °C (-58 °F to +122 °F).

Distributed By: