AMRITA VISHWA VIDYAPEETHAM

DEEMED TO BE UNIVERSITY UNDER SECTION 3 OF THE UGC ACT, 1956

SURVEILLANCE CAMERA CAR USING ESP32 CAM

TEAM MEMBERS-

RAHUL VARMA DOMMARAJU – BL.EN.U4ECE22046

ROHIT KORADA – BL.EN.U4ECE22047

ABHINAV P. AJITH – BL.EN.U4ECE22071

INTRODUCTION

- This is an ESP32 Surveillance Camera Car
- The car can help us access any inaccessible or a dangerous area.
- ESP32 camera Wi-Fi module has been used to stream the footage to the mobile web browser using HTTP Communication Protocol.
- The Webpage will have buttons for movement of the car and can vary the speed of the car as well.

OBJECTIVE

- Allows remote monitoring and control.
- Provides real time footage for decision making.
- Can capture images for documentation purposes
- Can assist in dangerous situations, such as wars, where we can know what is going on about distance ahead of us.

MATERIALS USED

- 4 DC motors + Car chassis (for car body)
- Arduino UNO board (for uploading code)
- L298N Motor Driver(for controlling the direction and speed of the DC motor, speed is controlled by regulating voltage , and direction can be changed by reversing voltage)
- ESP32 Wi-Fi camera module(for relaying images to the webpage)
- 7-12 V DC supply
- Jumper Wires
- Breadboard (for uploading code)

ESP32 CAM

- It is a small size, low power consumption camera module based on ESP32, it comes with a OV2640 camera and provides onboard TF card slot.
- It is useful in wireless video monitoring, Wi-Fi image upload.

EXPLANATION OF GPIO PINS

- GPIO (general purpose input/output)
- CLK- camera license key
- CMD- command

MicroSD card	ESP32
CLK	GPIO 14
CMD	GPIO 15
DATA0	GPIO 2
DATA1 / flashlight	GPIO 4
DATA2	GPIO 12
DATA3	GPIO 13

UPLOADING THE CODE

- As there is no USB port in ESP32 cam, we use a breadboard to upload the code.
- The connections are as follows
- VOR – RX
- VOT – TX
- 5V – 5V
- GND – GND
- IO0-GND Reset - GND

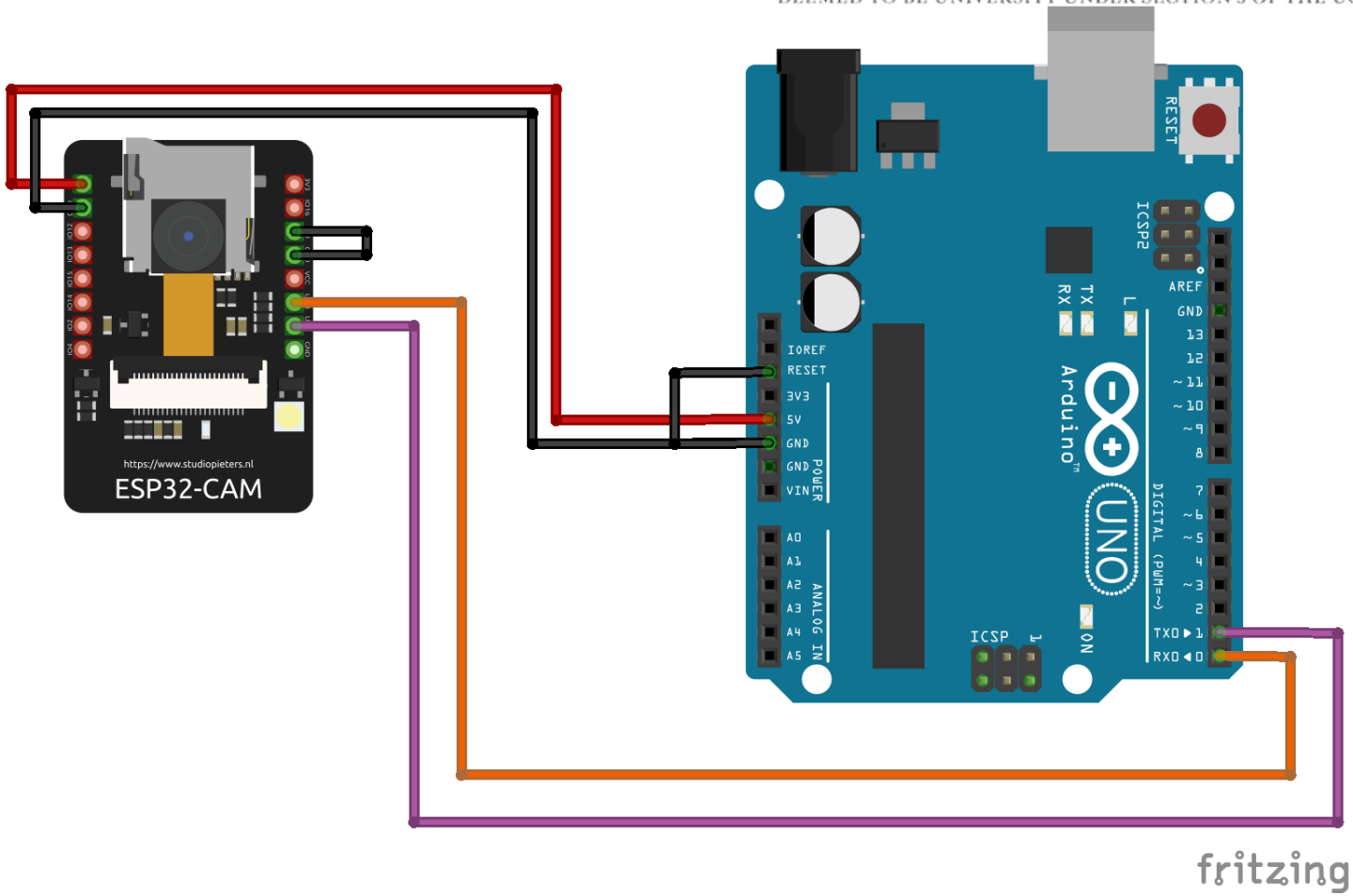

ASSEMBLY OF CAR

- DC motors are connected to L298N driver
- ESP32 cam gets 5V supply through motor driver.
- 7-12V battery is provided to L298N motor driver

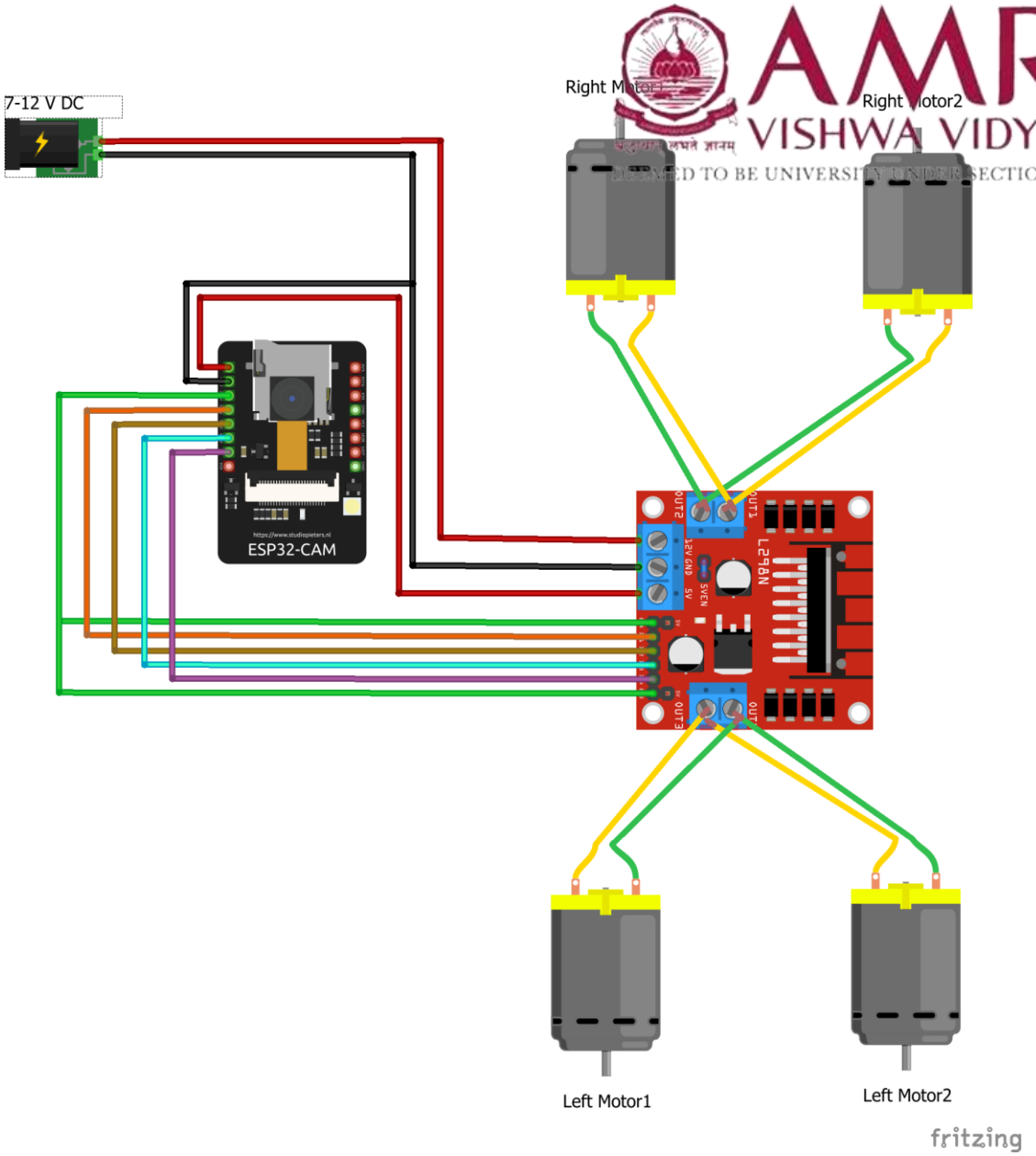

AMRITA VISHWA VIDYAPEETHAM
DEEMED TO BE UNIVERSITY UNDER SECTION 3 OF THE UGC ACT, 1956

ASSEMBLED CAR

DC supply connected to motor driver.

ESP32 Camera connected to motor driver.

DC Motors connected to motor driver

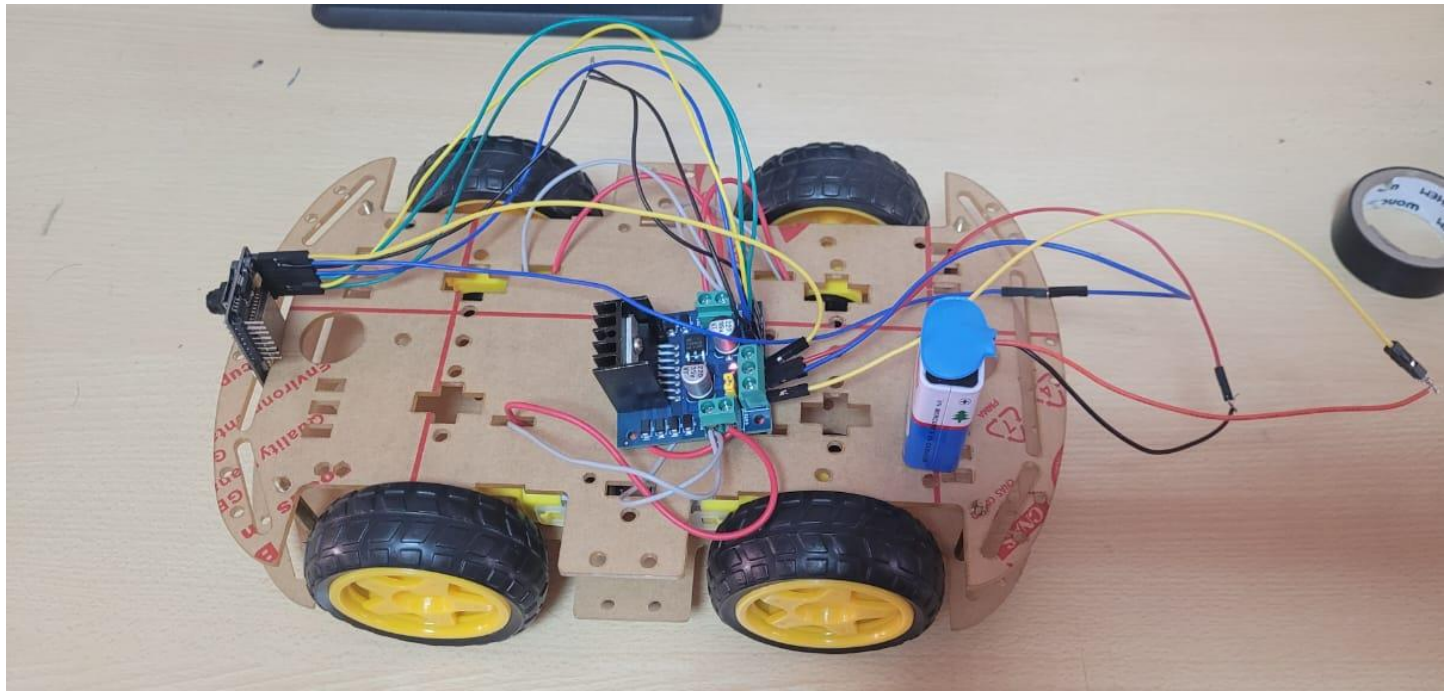

WEBPAGE INTERFACE

- HTTP communication protocol was used for connection between camera and mobile.
- We can control speed of car, intensity of light, and the direction too.

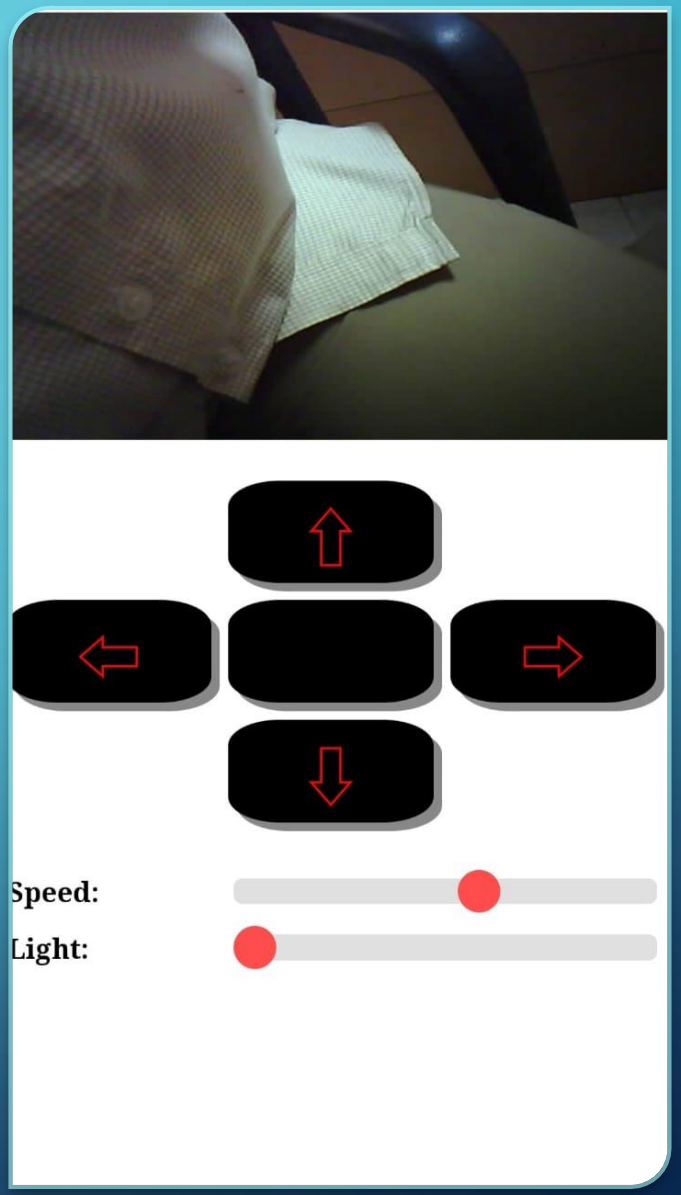

CODE EXPLANATION

- Few functions are defined here
- Even an HTML page for controlling is created and placed in the code.

```
#define UP 1
#define DOWN 2
#define LEFT 3
#define RIGHT 4
#define STOP 0

#define RIGHT_MOTOR 0
#define LEFT_MOTOR 1

#define FORWARD 1
#define BACKWARD -1

const int PWMFreq = 1000; /* 1 KHz */
const int PWMResolution = 8;
const int PWMSpeedChannel = 2;
const int PWMLightChannel = 3;
```

CODE EXPLANATION

- This function has been created to take input of motor number and direction from the webpage

```
void rotateMotor(int motorNumber, int motorDirection)
{
  if (motorDirection == FORWARD)
  {
    digitalWrite(motorPins[motorNumber].pinIN1, HIGH);
    digitalWrite(motorPins[motorNumber].pinIN2, LOW);
  }
  else if (motorDirection == BACKWARD)
  {
    digitalWrite(motorPins[motorNumber].pinIN1, LOW);
    digitalWrite(motorPins[motorNumber].pinIN2, HIGH);
  }
  else
  {
    digitalWrite(motorPins[motorNumber].pinIN1, LOW);
    digitalWrite(motorPins[motorNumber].pinIN2, LOW);
  }
}
```

```
void moveCar(int inputValue)
{
  Serial.printf("Got value as %d\n", inputValue);
  switch(inputValue)
  {

    case UP:
      rotateMotor(RIGHT_MOTOR, FORWARD);
      rotateMotor(LEFT_MOTOR, FORWARD);
      break;

    case DOWN:
      rotateMotor(RIGHT_MOTOR, BACKWARD);
      rotateMotor(LEFT_MOTOR, BACKWARD);
      break;

    case LEFT:
      rotateMotor(RIGHT_MOTOR, FORWARD);
      rotateMotor(LEFT_MOTOR, BACKWARD);
      break;

    case RIGHT:
      rotateMotor(RIGHT_MOTOR, BACKWARD);
      rotateMotor(LEFT_MOTOR, FORWARD);
      break;

    case STOP:
      rotateMotor(RIGHT_MOTOR, STOP);
      rotateMotor(LEFT_MOTOR, STOP);
      break;

    default:
      rotateMotor(RIGHT_MOTOR, STOP);
```

AMRITA VISHWA VIDYAPEETHAM
DEEMED TO BE UNIVERSITY UNDER SECTION 3 OF THE UGC ACT, 1956

CODE EXPLANATION

THIS FUNCTION TAKES COMMANDS ,AND MOVES THE CAR WHEELS ACCORDINGLY

```
void handleRoot(AsyncWebServerRequest *request)
{
  request->send_P(200, "text/html", htmlHomePage);
}
```

CODE EXPLANATION

THIS FUNCTION WILL SET THE HTML PAGE WHEN WE TYPE THE IP ADDRESS ON MOBILE BROWSER

```
switch (type)
{
  case WS_EVT_CONNECT:
    Serial.printf("WebSocket client #%u connected from %s\n", client->id(), client->remoteIP().toString().c_str());
    break;
  case WS_EVT_DISCONNECT:
    Serial.printf("WebSocket client #%u disconnected\n", client->id());
    moveCar(0);
    ledcWrite(PWMLightChannel, 0);
    break;
  case WS_EVT_DATA:
    AwsFrameInfo *info;
    info = (AwsFrameInfo*)arg;
    if (info->final && info->index == 0 && info->len == len && info->opcode == WS_TEXT)
    {
      std::string myData = "";
      myData.assign((char *)data, len);
      std::istringstream ss(myData);
      std::string key, value;
      std::getline(ss, key, ',');
      std::getline(ss, value, ',');
      Serial.printf("Key [%s] Value[%s]\n", key.c_str(), value.c_str());
      int valueInt = atoi(value.c_str());
      if (key == "MoveCar")
      {
        moveCar(valueInt);
      }
      else if (key == "Speed")
      {
        ledcWrite(PWMSpeedChannel, valueInt);
      }
      else if (key == "Light")
      {
```

CODE EXPLANATION

THIS FUNCTION TAKES ANY COMMAND FOR ESP32 CAM FROM THE WEBPAGE

```
void sendCameraPicture()
{
  if (cameraClientId == 0)
  {
    return;
  }
  unsigned long  startTime1 = millis();
  //capture a frame
  camera_fb_t * fb = esp_camera_fb_get();
  if (!fb)
  {
      Serial.println("Frame buffer could not be acquired");
      return;
  }

  unsigned long  startTime2 = millis();
  wsCamera.binary(cameraClientId, fb->buf, fb->len);
  esp_camera_fb_return(fb);

  //Wait for message to be delivered
  while (true)
  {
    AsyncWebSocketClient * clientPointer = wsCamera.client(cameraClientId);
    if (!clientPointer || !(clientPointer->queueIsFull()))
    {
      break;
    }
    delay(1);
  }

  unsigned long  startTime3 = millis();
  Serial.printf("Time taken Total: %d|%d|%d\n",startTime3 - startTime1, startTime2 - startTime1, startTime3-startTime2 );
}
```

CODE EXPLANATION

THIS FUNCTION IS USED TO SEND PICTURE FROM CAMERA TO WEBPAGE

DEMO

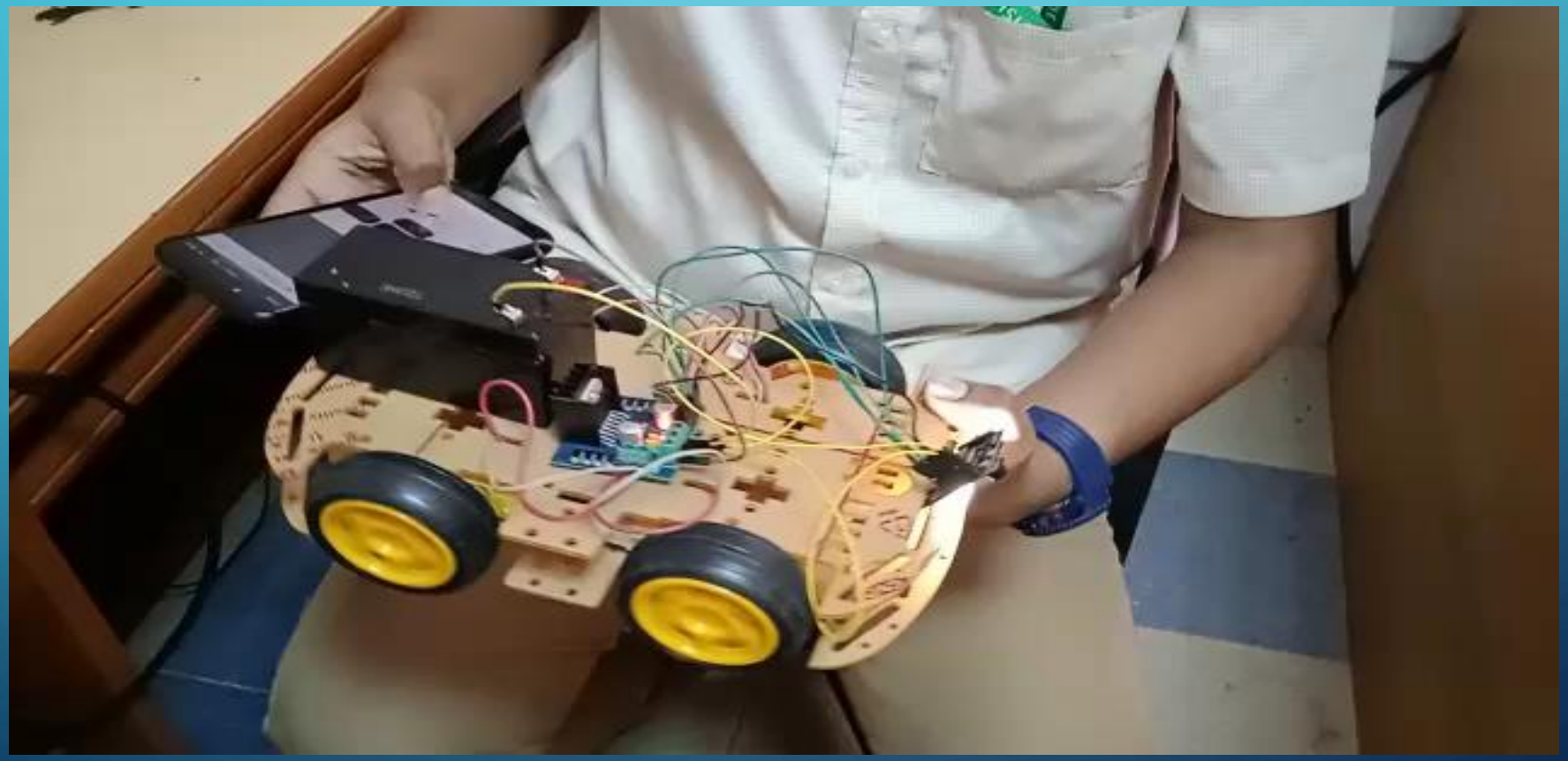

THANK YOU