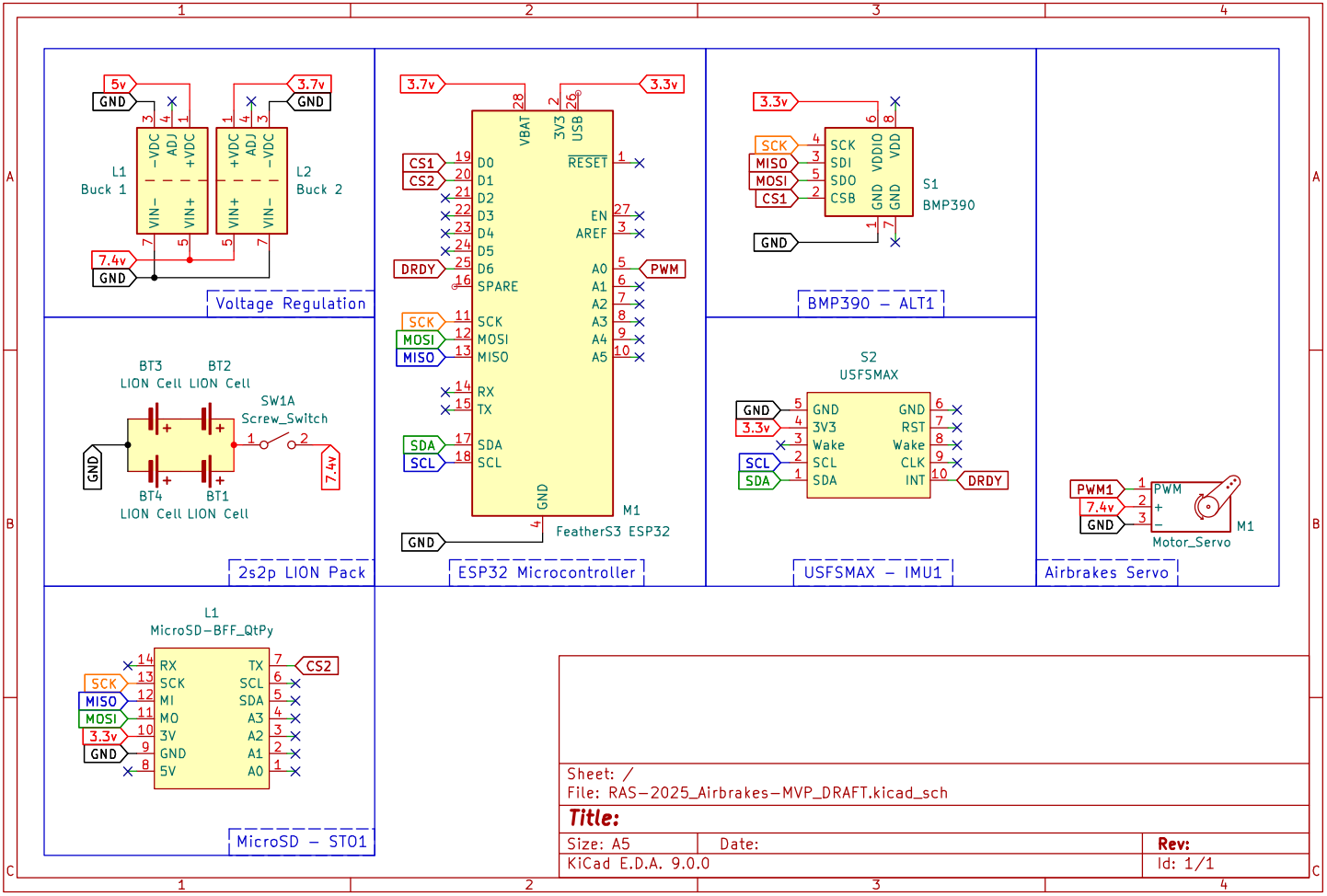
Voltage Regulation
L1
Buck 1
L2
Buck 2
5v
3.7v
7.4v
GND
2s2p LION Pack
BT3
BT2
BT4
BT1
LION Cell
SW1A
Screw_Switch
ESP32 Microcontroller
M1
FeatherS3 ESP32
VBAT
3V3
USB
RESET
EN
AREF
PWM
CS1
CS2
DRDY
SCK
MOSI
MISO
SDA
SCL
BMP390 – ALT1
S1
BMP390
USFSMAX – IMU1
S2
USFSMAX
Airbrakes Servo
Motor_Servo
MicroSD – STO1
MicroSD-BFF_QtPy
Sheet: /
File: RAS-2025_Airbrakes-MVP_DRAFT.kicad_sch
Title:
Size: A5
Date:
Rev:
KiCad E.D.A. 9.0.0
Id: 1/1