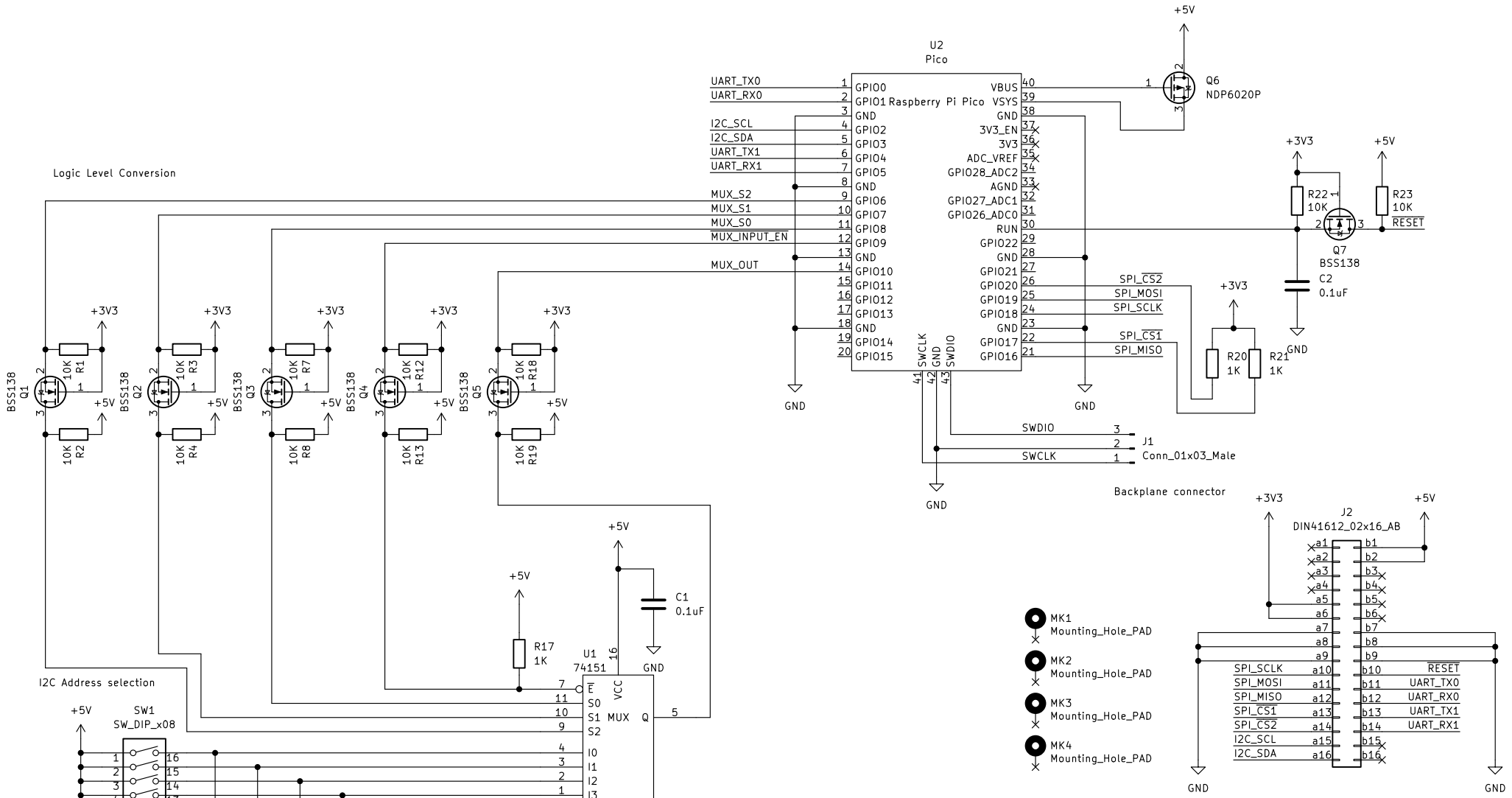

Licence: CERN-OHL-P-2.0 or any later version
Sidings Media

Sheet: /
File: rp2040-pico.kicad_sch

Title: RP2040/Pico Main Control Board

Size: A4	Date:	Rev: 0.1
KiCad E.D.A. kicad 6.0.6+dfsg-1		Id: 1/1