AVR

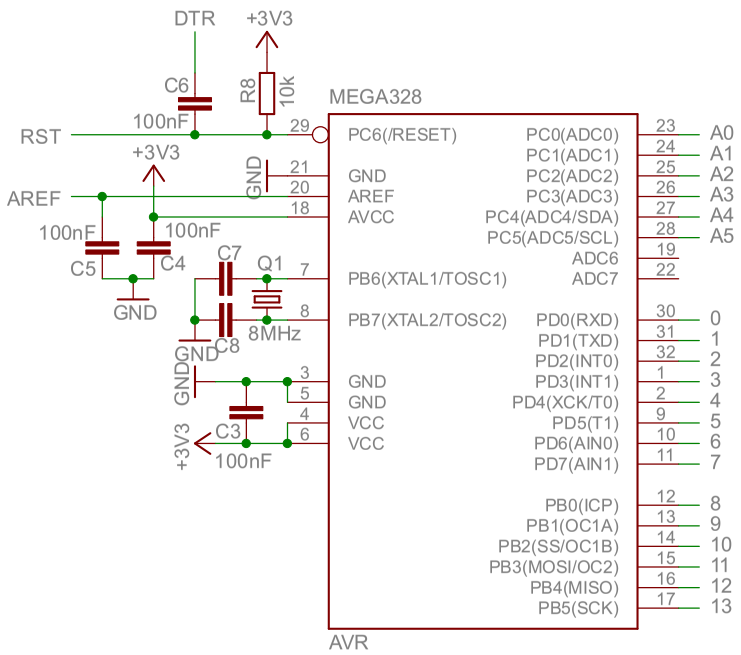

LEDs

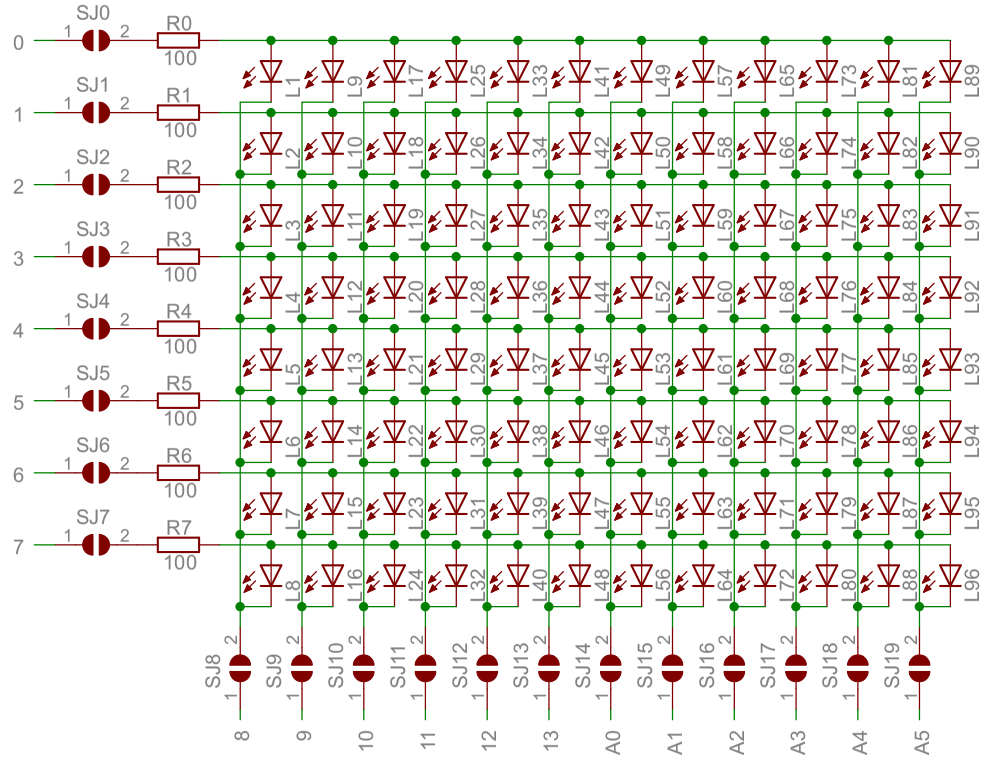

Connectors

ARDUINO

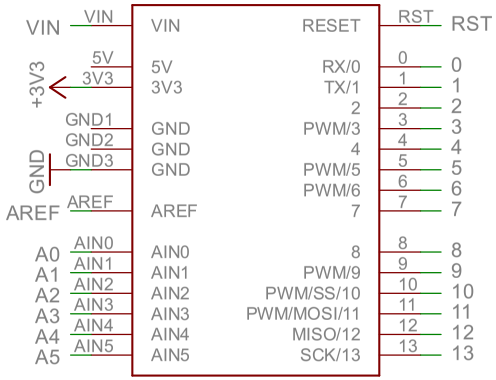

Remove the battery when connecting an external power supply or FTDI cable !

FTDI

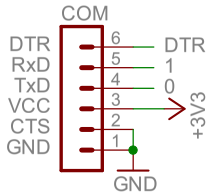

AVR-ISP

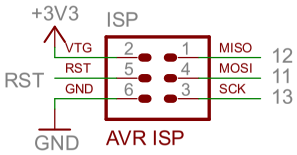

Power

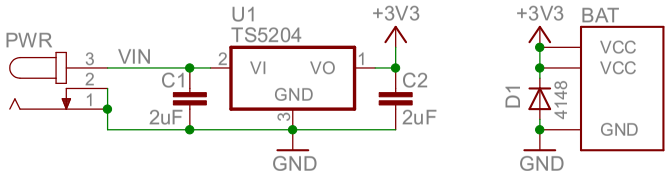

Released under the Creative Commons Attribution Share-Alike 3.0 License
http://creativecommons.org/licenses/by-sa/3.0/

Designed by Andreas Watterott (Watterott electronic)

X1 X2 X3 X4

Logo

vCard_v10

15.12.2010 20:07:38

Sheet: 1/1

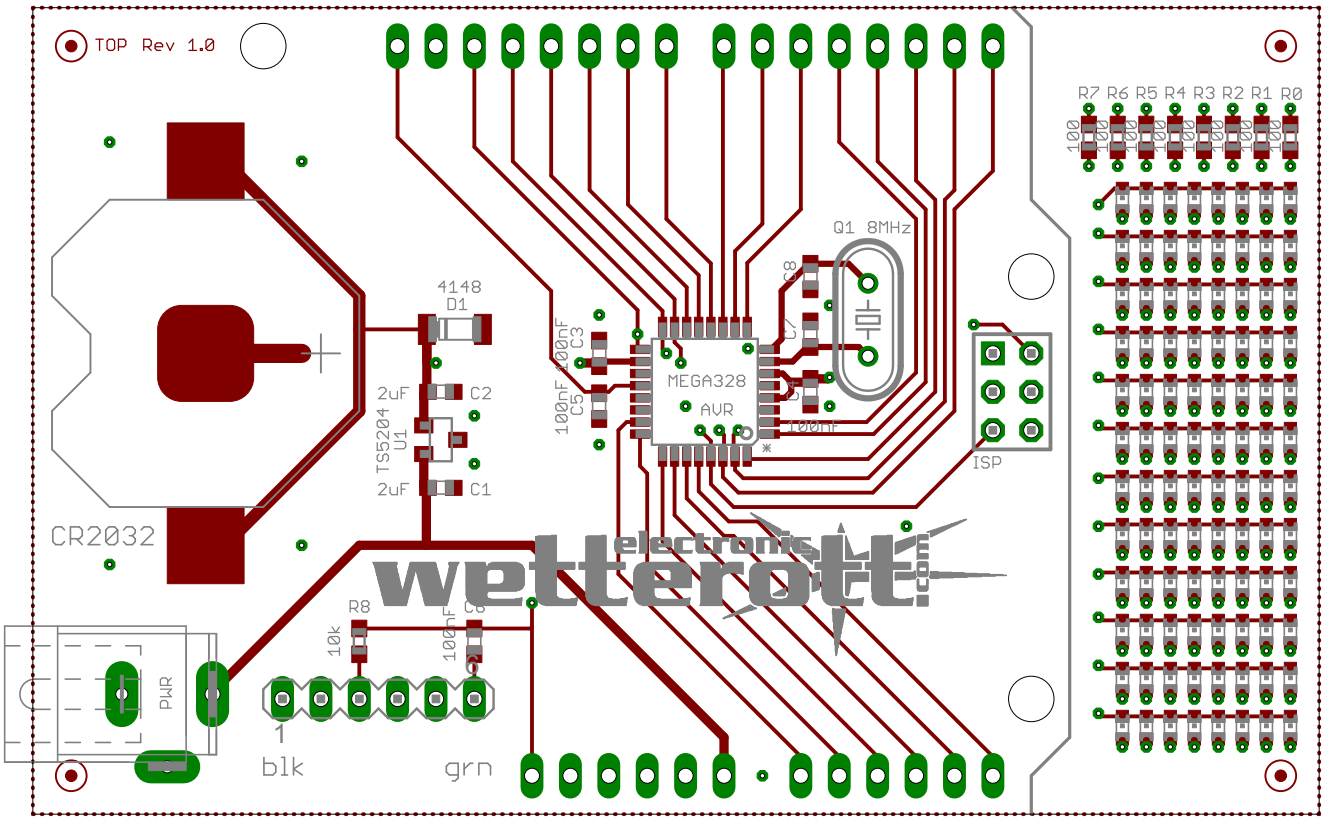
TOP Rev 1.0
R7 R6 R5 R4 R3 R2 R1 R0
100
Q1 8MHz
C8
C7
C6
100nF
4148
D1
100nF C3
100nF C5
MEGA328
AVR
2uF
C2
TS5204
U1
2uF
C1
ISP
CR2032
electronics
wetterott.com
R8
10k
100nF
C9
PWR
1
blk
grn