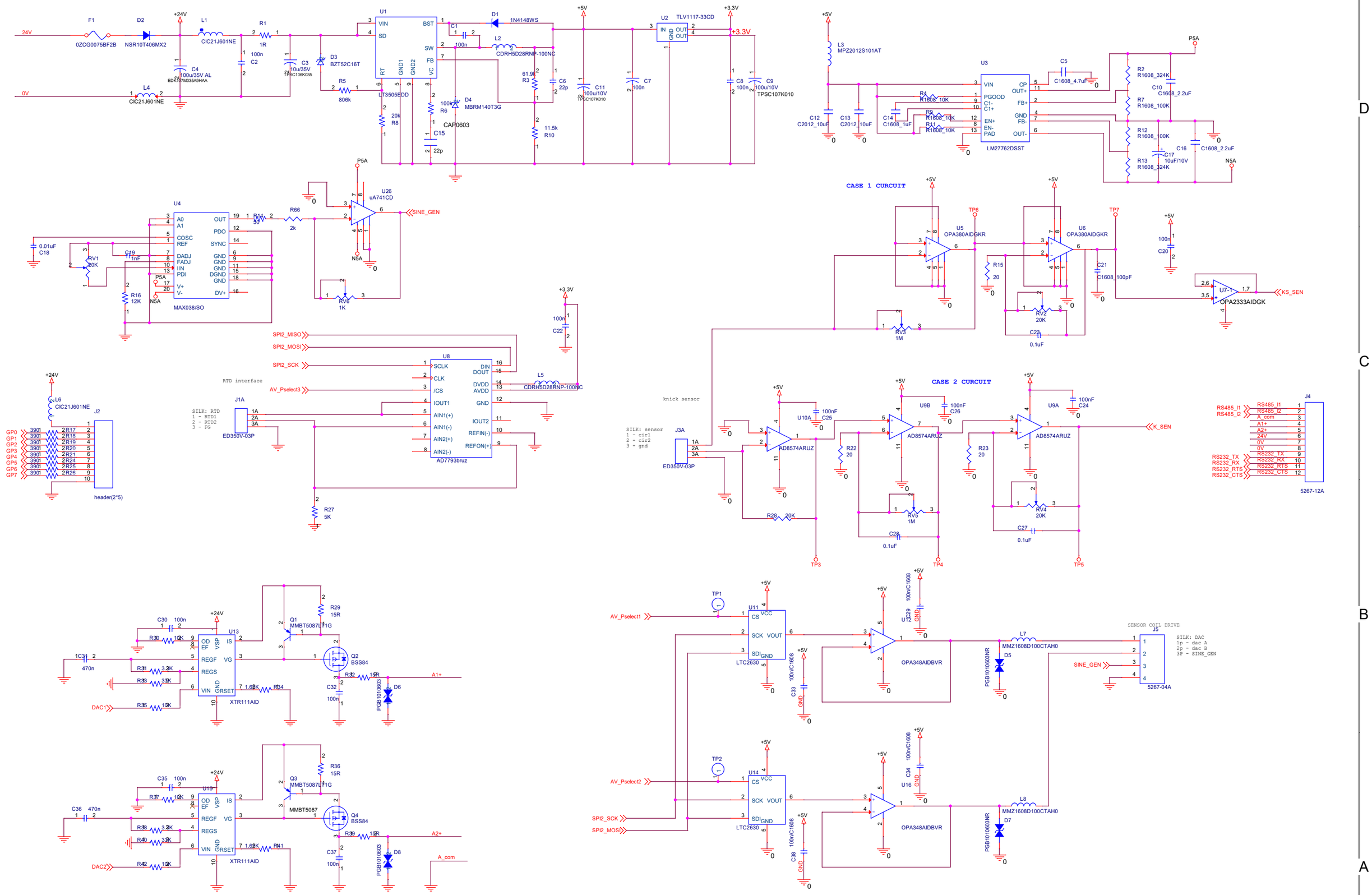

Title	<Title>	
Size A2	Document Number <Doc>	Rev <RevCode>
Date: Friday, August 21, 2020	Sheet 1 of 2	

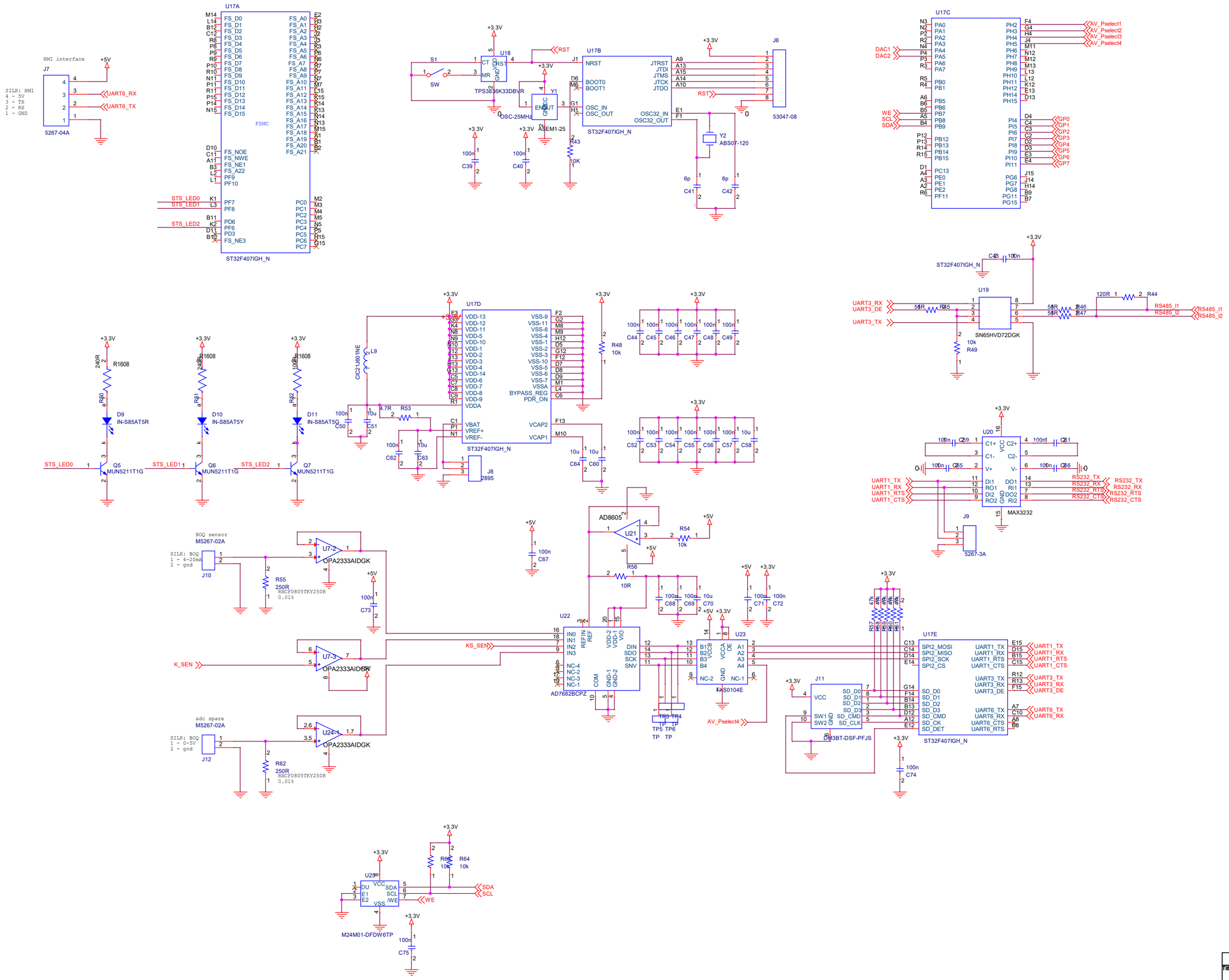

Title	<Title>
Size A2	Document Number <Doc>
Rev	<RevCode>
Date: Friday, August 21, 2020	Sheet 2 of 2