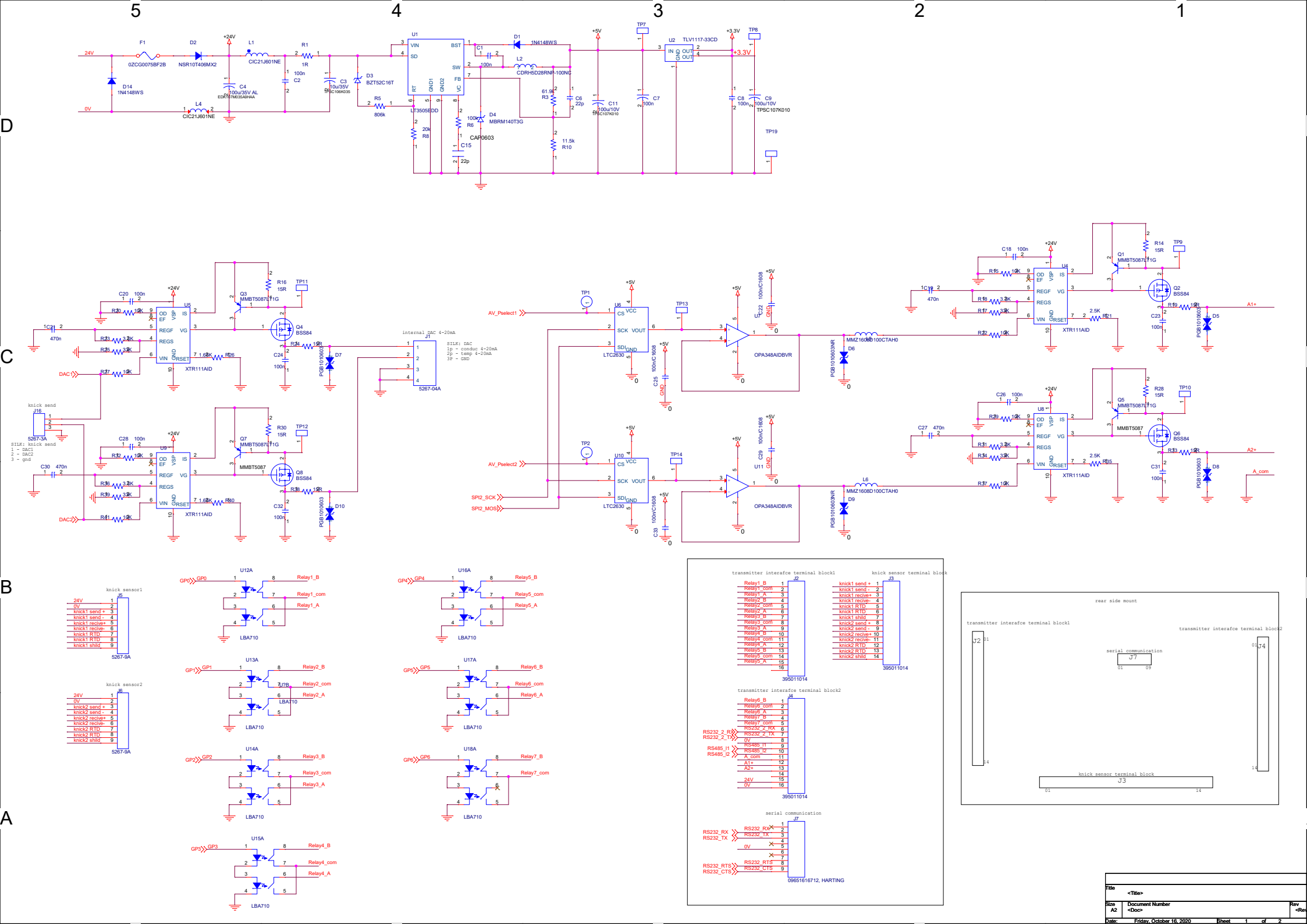
5
4
3
2
1
D
C
B
A
24V
0V
F1
0ZCG0075BF2B
D2
NSR10T406MX2
+24V
L1
CIC21J601NE
R1
1R
C2
100n
C3
10u/35V
TPSC106K035
D3
BZT52C16T
D14
1N4148WS
C4
100u/35V AL
EDK107M035A9HAA
L4
CIC21J601NE
R5
806k
U1
VIN
SD
RT
GND1
GND2
BST
SW
FB
VC
LT3505EDD
20k
R8
100k
R6
C15
22p
CAP0603
D4
MBRM140T3G
C1
100n
D1
1N4148WS
L2
CDRH5D28RNP-100NC
61.9k
R3
C6
22p
11.5k
R10
+5V
C11
100u/10V
TPSC107K010
TP7
C7
100n
U2
TLV1117-33CD
IN
GND
OUT
OUT
+3.3V
TP8
C8
100n
C9
100u/10V
TPSC107K010
TP19
U5
U9
U4
U8
OD
EF
VSP
IS
REGF
VG
REGS
VIN
GND
RSET
XTR111AID
Q3
MMBT5087LT1G
Q4
BSS84
Q7
MMBT5087
Q8
BSS84
R16
15R
R30
15R
TP11
TP12
C20
100n
C28
100n
C24
100n
C32
100n
R24
15R
R38
15R
R26
1.62K
R40
1.62K
PGB1010603
D7
D10
DAC1
DAC2
knick send
J16
5267-3A
SILK: knick send
1 - DAC1
2 - DAC2
3 - gnd
internal DAC 4-20mA
J1
5267-04A
SILK: DAC
1p - conduc 4-20mA
2p - temp 4-20mA
3P - GND
AV_Pselect1
AV_Pselect2
SPI2_SCK
SPI2_MOS
TP1
TP2
U6
U10
CS
SCK
SDI
VCC
VOUT
GND
LTC2630
TP13
TP14
100nC1608
C25
C33
U7
U11
OPA348AIDBVR
C22
C29
MMZ1608D100CTAH0
L6
PGB1010603NR
D6
D9
Q1
MMBT5087LT1G
Q2
BSS84
Q5
MMBT5087LT1G
MMBT5087
Q6
BSS84
R14
15R
R28
15R
TP9
TP10
C18
100n
C26
100n
C19
470n
C27
470n
R21
2.5K
R35
2.5K
C23
100n
C31
100n
D5
D8
A1+
A2+
A_com
knick sensor1
J5
5267-9A
knick sensor2
J6
5267-9A
24V
0V
knick1 send +
knick1 send -
knick1 recive+
knick1 recive-
knick1 RTD
knick1 shild
knick2 send +
knick2 send -
knick2 recive+
knick2 recive-
knick2 RTD
knick2 shild
U12A
U13A
U14A
U15A
U16A
U17A
U18A
U17B
GP0
GP1
GP2
GP3
GP4
GP5
GP6
Relay1_B
Relay1_com
Relay1_A
Relay2_B
Relay2_com
Relay2_A
Relay3_B
Relay3_com
Relay3_A
Relay4_B
Relay4_com
Relay4_A
Relay5_B
Relay5_com
Relay5_A
Relay6_B
Relay6_com
Relay6_A
Relay7_B
Relay7_com
LBA710
transmitter interafce terminal block1
J2
395011014
knick sensor terminal block
J3
395011014
transmitter interafce terminal block2
J4
395011014
serial communication
J7
09651616712, HARTING
RS232_2_RX
RS232_2_TX
RS485_I1
RS485_I2
A1+
A2+
RS232_RX
RS232_TX
RS232_RTS
RS232_CTS
rear side mount
transmitter interafce terminal block1
transmitter interafce terminal block2
serial communication
knick sensor terminal block
Title
<Title>
Size
A2
Document Number
<Doc>
Rev
<Rev>
Date:
Friday, October 16, 2020
Sheet
1
of
2

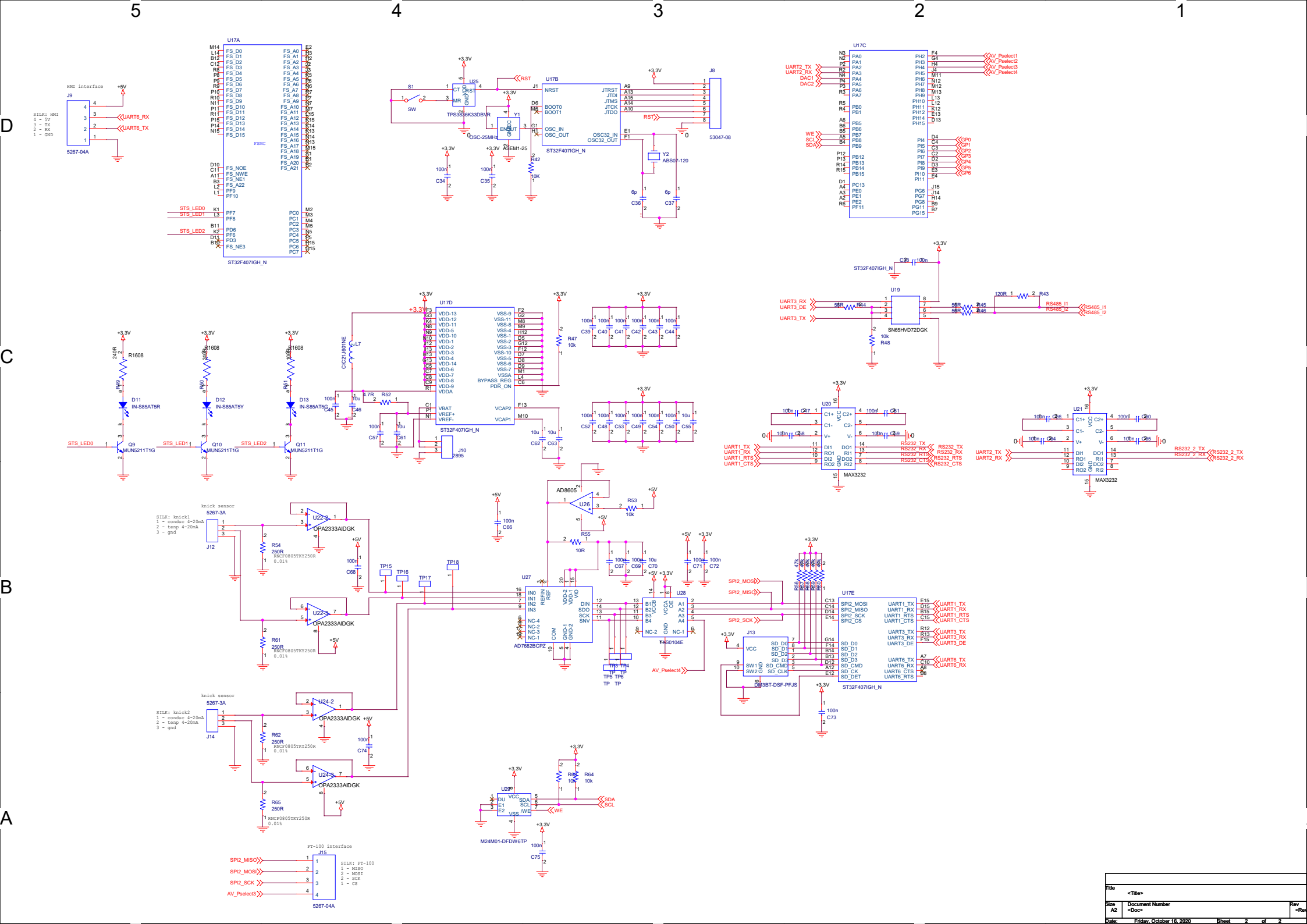
5
4
3
2
1
D
C
B
A
U17A
ST32F407IGH_N
HMI interface
J9
5267-04A
SILK: HMI
4 - 5V
3 - TX
2 - RX
1 - GND
UART6_RX
UART6_TX
STS_LED0
STS_LED1
STS_LED2
S1
SW
TPS3836K33DBVR
U25
RST
U17B
ST32F407IGH_N
OSC-25MHz
ASEM1-25
Y1
Y2
ABS07-120
J8
53047-08
U17C
UART2_TX
UART2_RX
DAC1
DAC2
AV_Pselect1
AV_Pselect2
AV_Pselect3
AV_Pselect4
WE
SCL
SDA
GP0
GP1
GP2
GP3
GP4
GP5
GP6
U17D
ST32F407IGH_N
CIC27J601NE
L7
J10
2895
R47
10k
D11
IN-S85AT5R
D12
IN-S85AT5Y
D13
IN-S85AT5G
Q9
MUN5211T1G
Q10
MUN5211T1G
Q11
MUN5211T1G
U19
SN65HVD72DGK
UART3_RX
UART3_DE
UART3_TX
RS485_I1
RS485_I2
R43
120R
R48
10k
U20
U21
MAX3232
UART1_TX
UART1_RX
UART1_RTS
UART1_CTS
RS232_TX
RS232_RX
RS232_RTS
RS232_CTS
RS232_2_TX
RS232_2_RX
knick sensor
5267-3A
J12
J14
SILK: knick1
1 - conduc 4-20mA
2 - temp 4-20mA
3 - gnd
SILK: knick2
1 - conduc 4-20mA
2 - temp 4-20mA
3 - gnd
U22-2
U22-3
U24-2
U24-3
OPA2333AIDGK
R54
250R
R61
250R
R62
250R
R65
250R
RNCF0805TKY250R
0.01%
AD8605
U26
R53
10k
R55
10R
U27
AD7682BCPZ
U28
TXS0104E
U17E
ST32F407IGH_N
SPI2_MOSI
SPI2_MISO
SPI2_SCK
SPI2_CS
J13
DM3BT-DSF-PFJS
U29
M24M01-DFDW6TP
R63
10k
R64
10k
PT-100 interface
J15
5267-04A
SILK: PT-100
1 - MISO
2 - MOSI
3 - SCK
1 - CS
Title
<Title>
Size
A2
Document Number
<Doc>
Rev
<Rev>
Date:
Friday, October 16, 2020
Sheet
2
of
2