# PSI-1000/3000 MAIN BOARD

Version 0.3:  Dec-21, 2021

## SCHEMATICS PAGE DESCRIPTIONS

P01: COVER
P02: MCU
P03: PWR, ADC, GPIO(ALD IN/OUT), LED
P04: DAC
P05: UART(RS232, RS485), Ethernet

## INDICATION LED for SYSTEM POWER

## INPUT POWER SUPPLY RATING

+24VDC  : INPUT
+12VDC  : 0.9A (Max)
+5VDC  :  0.9A (Max)
+3.3VDC : 800mA (Max)

## INDICATION LED for BOARD STATUS

D1 : YELLOW
D2 : GREEN
D3 : RED

TOP SILK

ATiK Logo

ATiK Co., Ltd
ASS'Y: PSI-1000/3000 Main
P/N  : PSI-1000/3000 Main, Rev0.3
S/N  :

File: PSI-1000/3000 Main
Size: A2 | Document Number: <Doc> | Rev: 0.3
Date: Wednesday, February 23, 2022 | Sheet  of

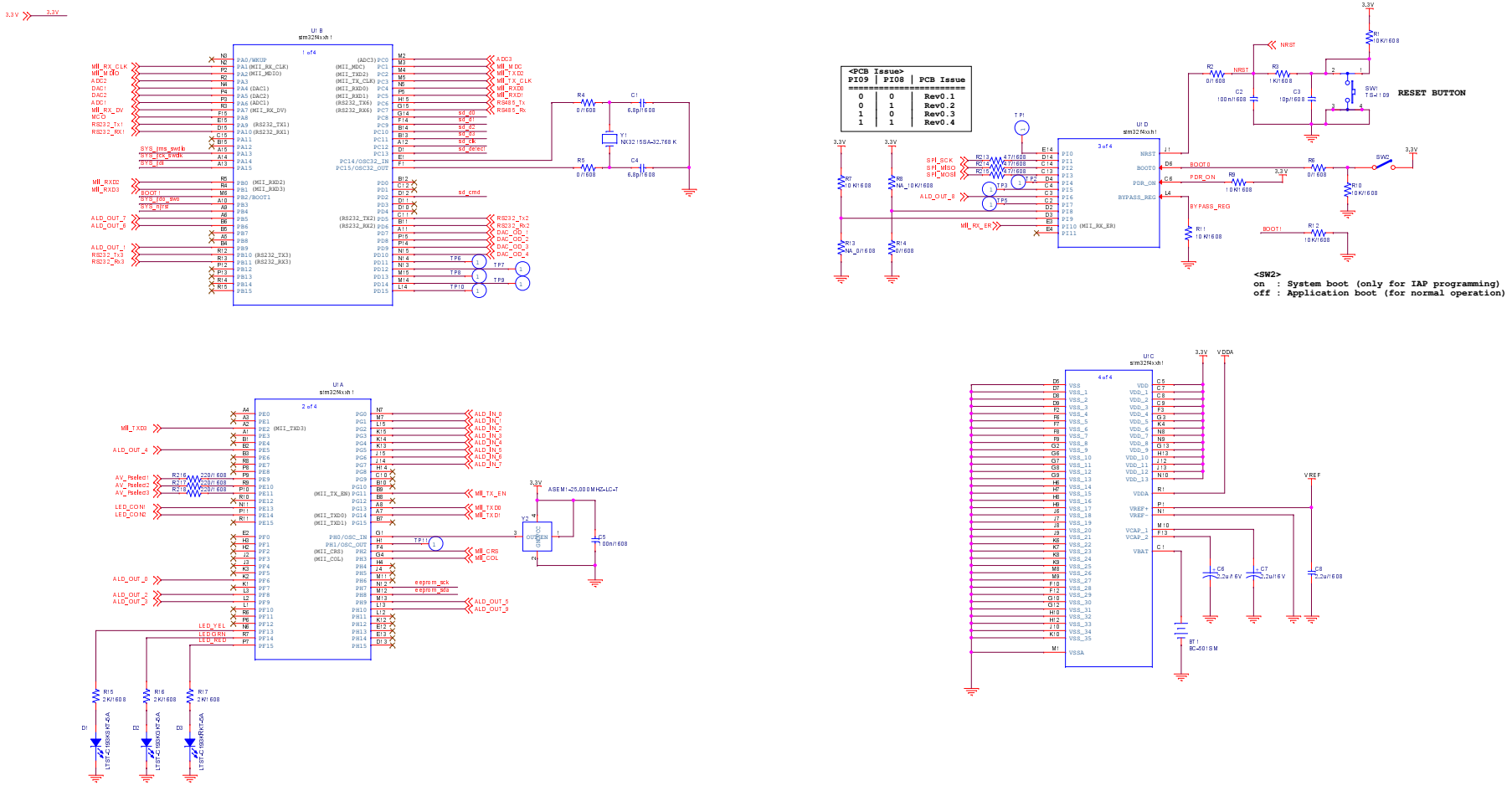


## MICRO SD CARD

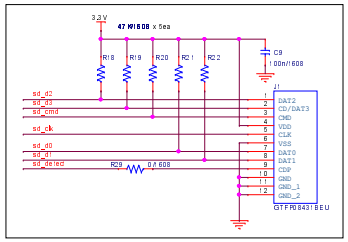

## EEPROM (Not Assemble)

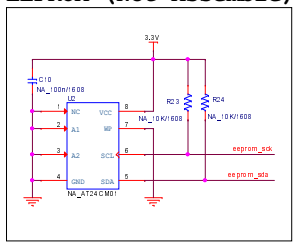

## JTAG

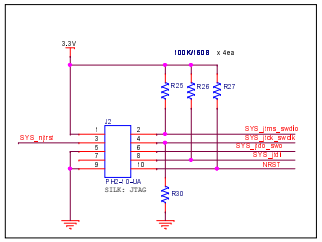

## MCU POWER COUPLING CAPACITOR

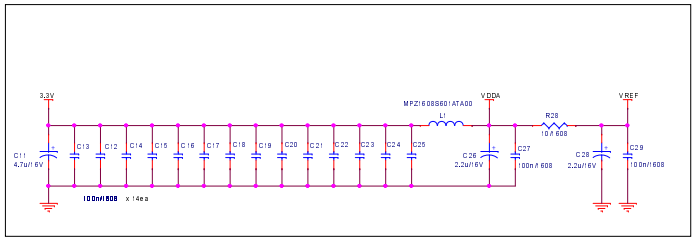

| | | |
|---|---|---|
| Title | PSI-1000/3000 Main | |
| Size A2 | Document Number <Doc> | Rev 0.3 |
| Date: Wednesday, February 23, 2022 | Sheet 2 of 5 | |

## POWER SUPPLY for +5.0V, +3.3V

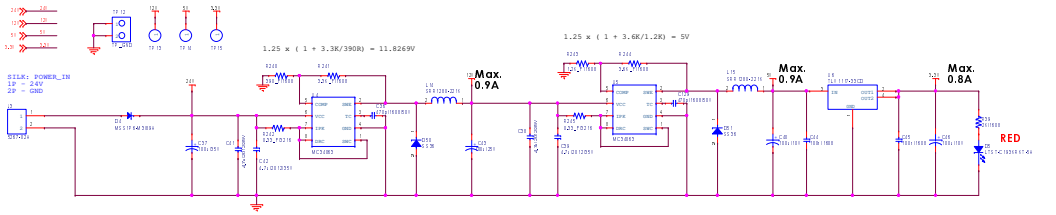


## LED (External 2-Port)

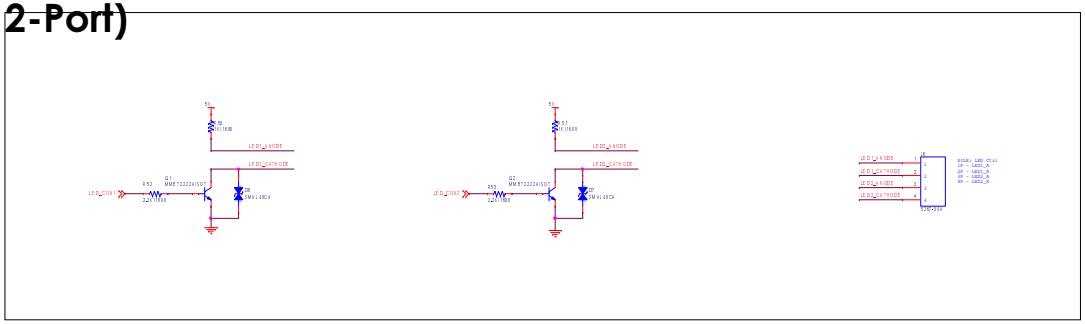

## GPIO(Digital Input 8-Port / Output 10-Port)

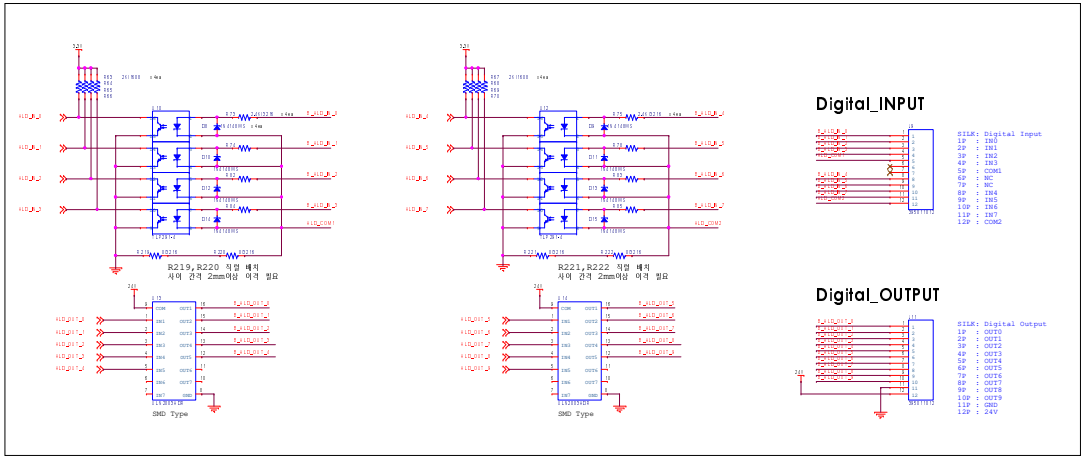


## Internal ADC

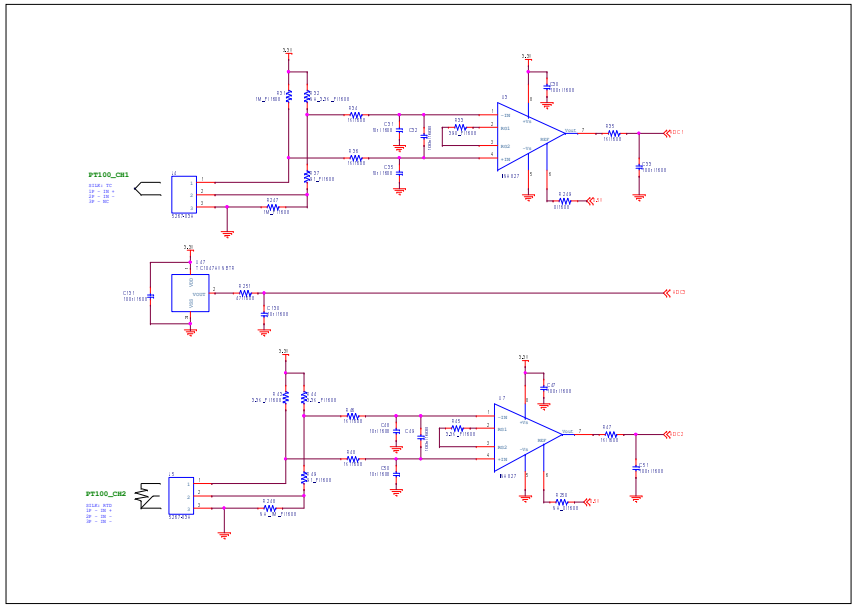


## External ADC

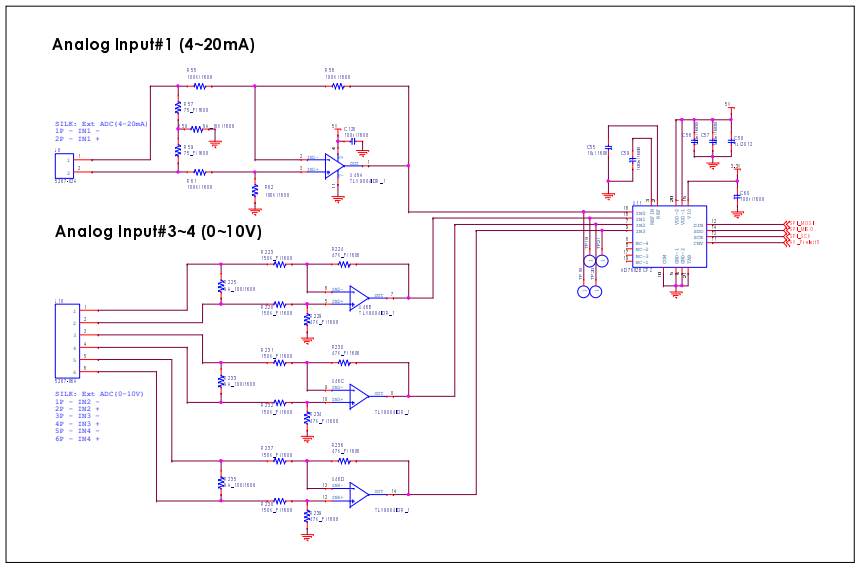


PSI-1000/3000 Main

## Internal DAC_OUT

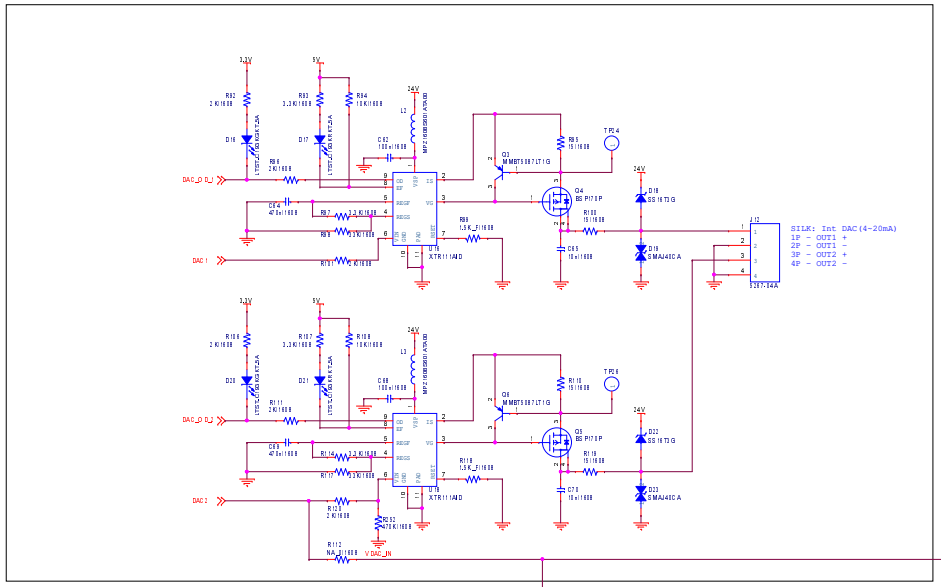


## Analog Output (0~10V)

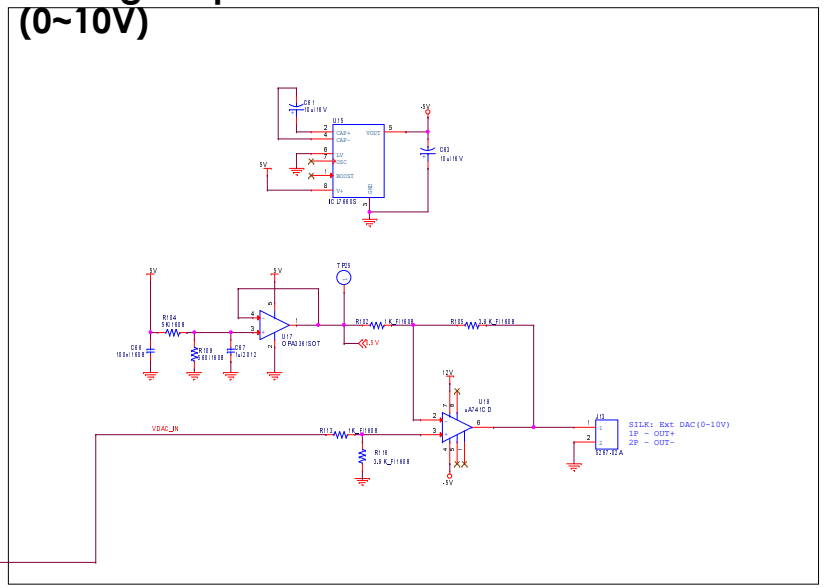


## External DAC_OUT

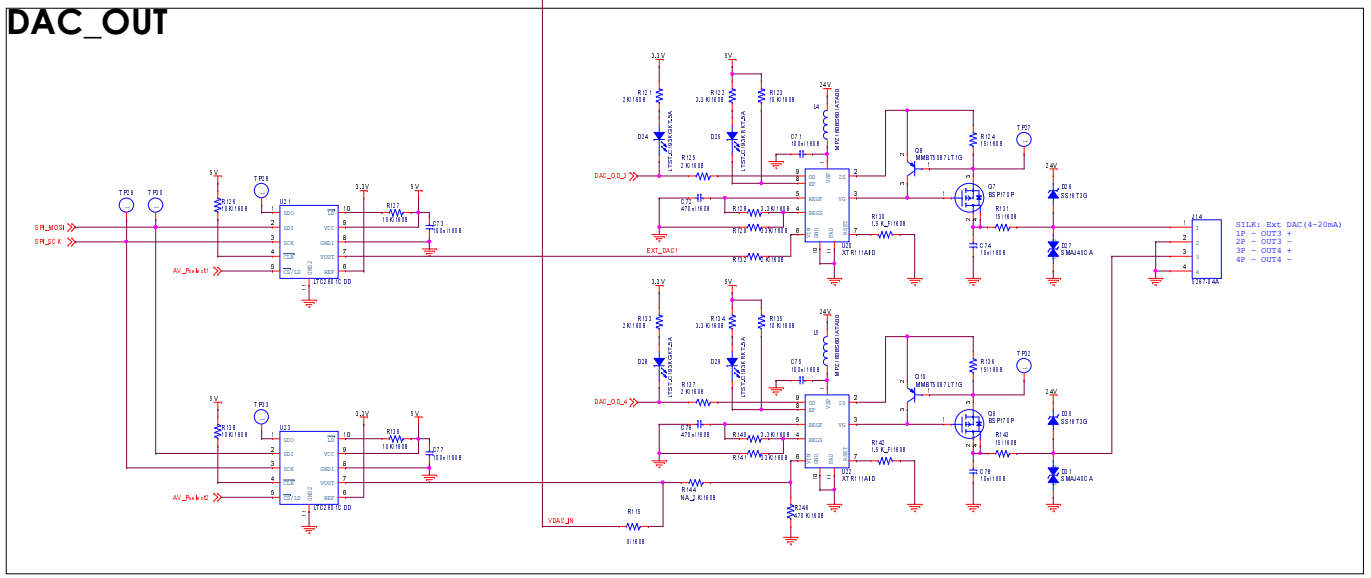


PSi-1000/3000 Main

# RS232(PC,DEBUG,LCD,RESEVED-4Port), Ethernet

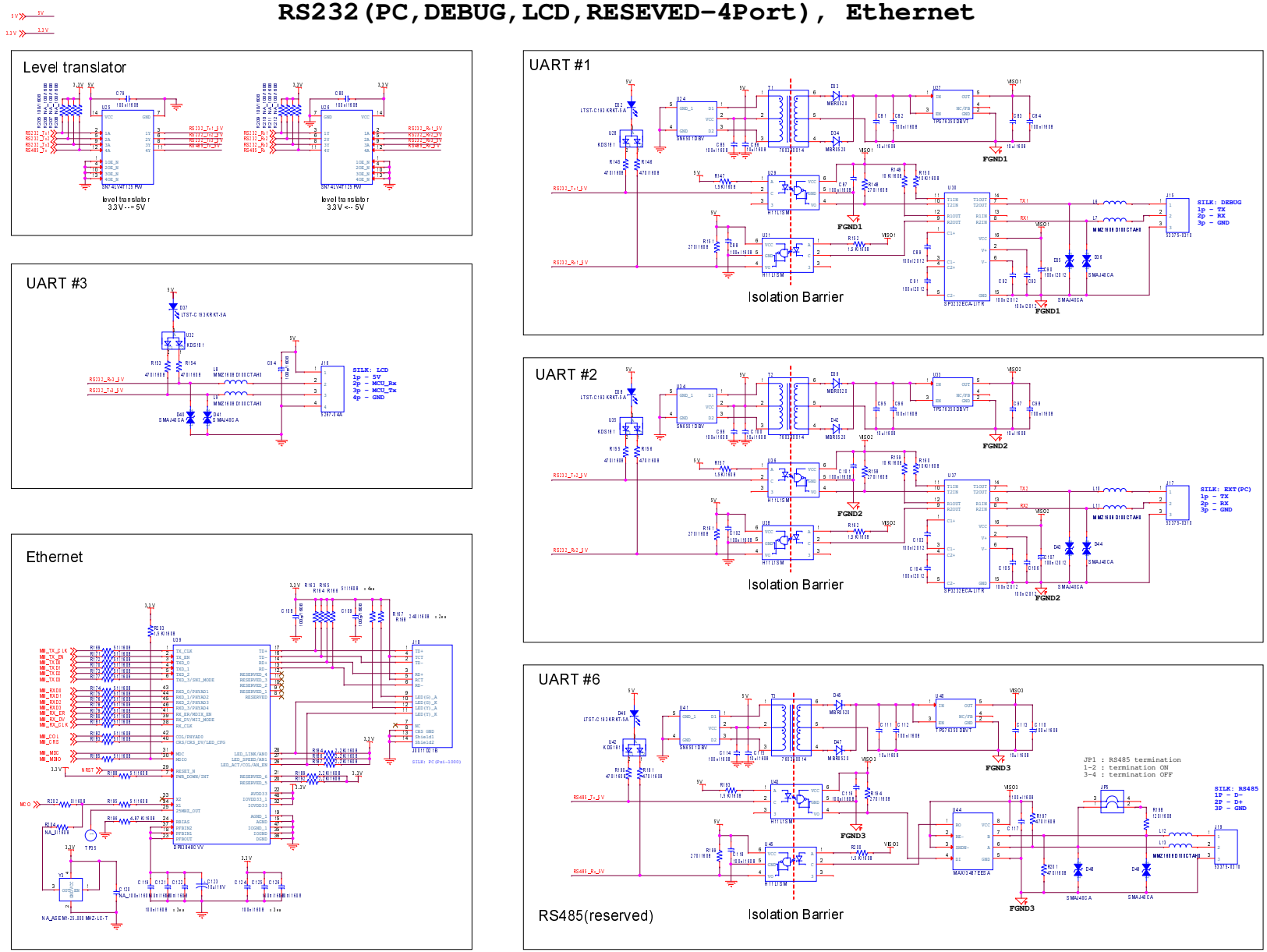


| | |
|---|---|
| File | PSI-1000/3000 Main |
| Size | Document Number: Custom <OBJ> |
| Rev | 0.3 |
| Date: | Wednesday, February 23, 2022 |
| Sheet | 5 of 5 |