NO.	COUNT	REVISIONS	DATE	APPROVED
1	X			
2	X			
3	X			

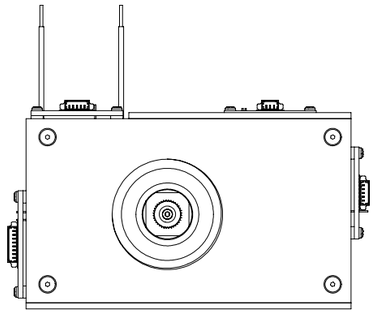

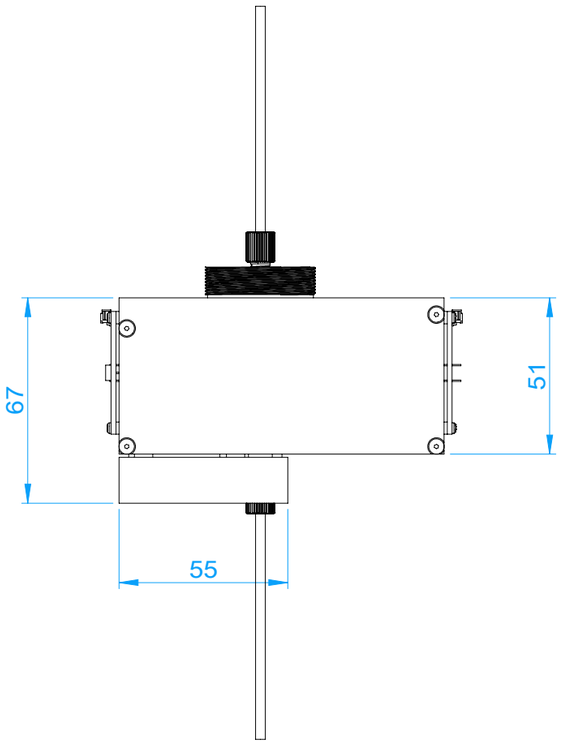

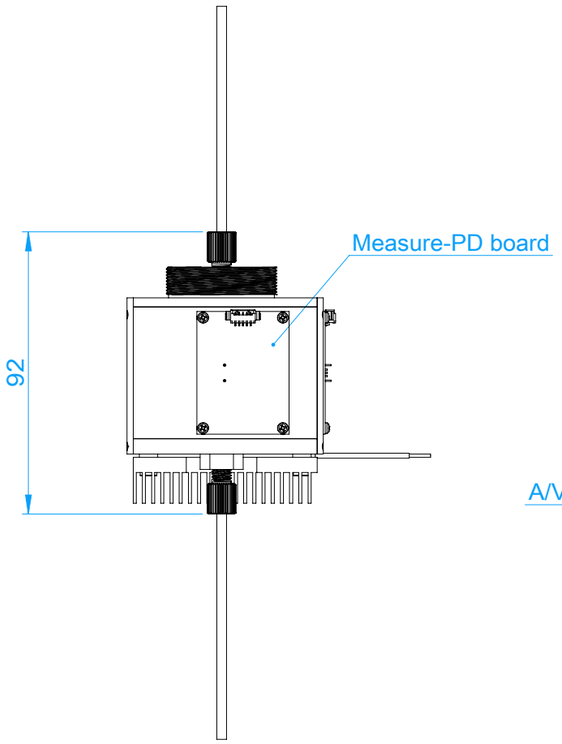

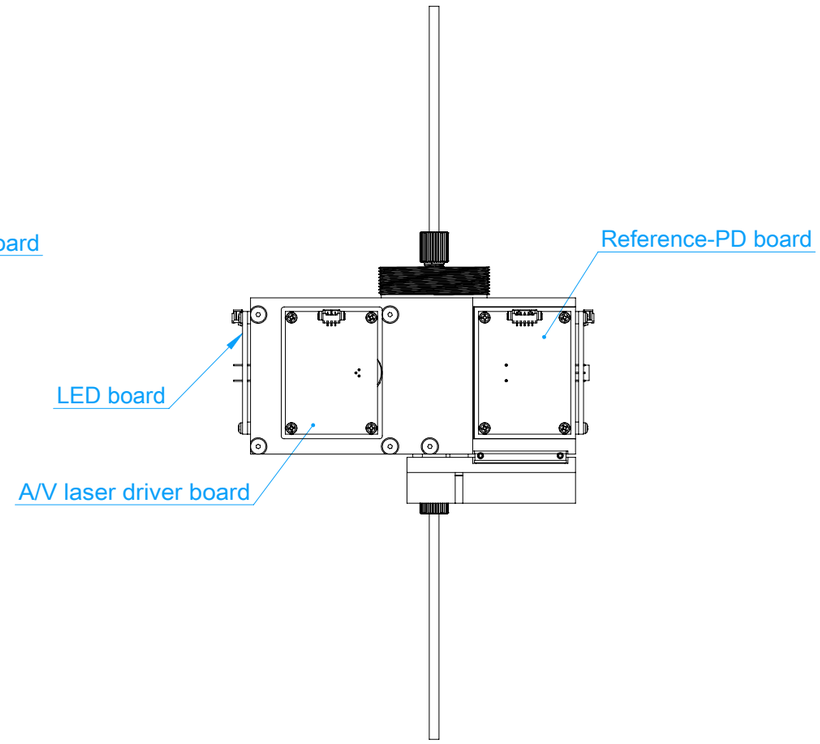

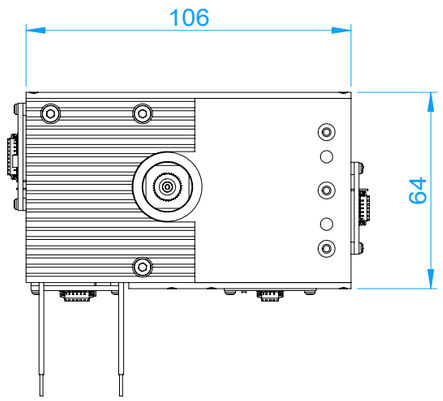

UNLESS OTHERWISE SPECIFIED, DIMENSIONS ARE IN MILIMETERS AND TOLERANCES ARE AS FOLLOWS:

0 – 6	±0.1
6 – 15	±0.1
15 – 60	±0.15
60 – 200	±0.2
200 – ∞	±0.3

ANGULAR TOLERANCE: ±0.5°

WIKI OPTICS

PART NAME	MATERIAL	FINISH	QUANTITY

DRAWN	DATE (YY/MM/DD)	MODEL	SCALE 1/2
DESIGNED	DATE (YY/MM/DD)	UNIT NAME	SIZE A3
CHECKED	DATE (YY/MM/DD)		SHEET 1 OF 1
APPROVED	DATE (YY/MM/DD)	PART NO.	

DO NOT SCALE DRAWING