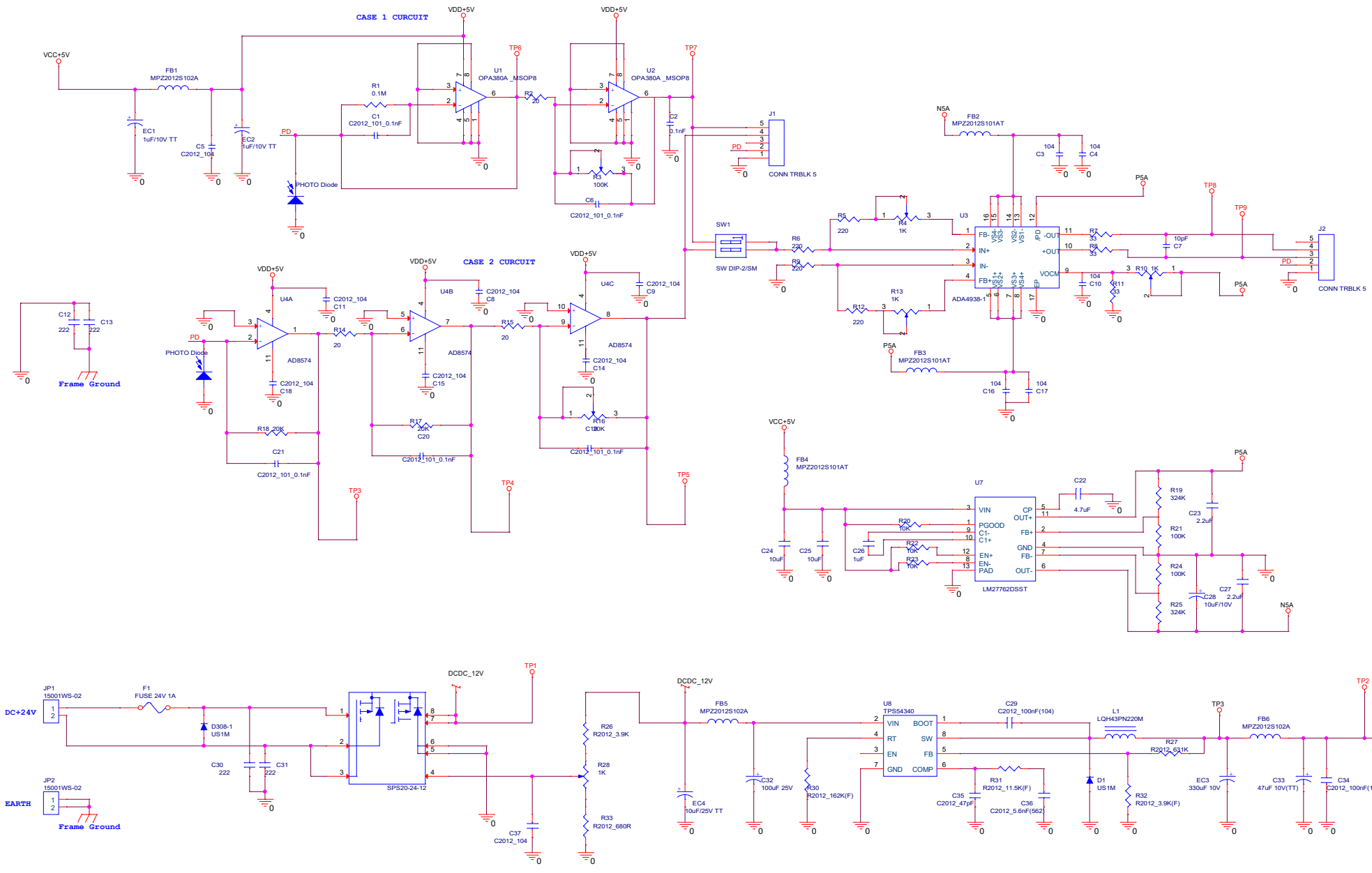

Title	PD,POWER SCHEMATIC	
Size C	Document Number ATIK	Rev A
Date: Friday, June 05, 2020	Sheet 1 of 1	