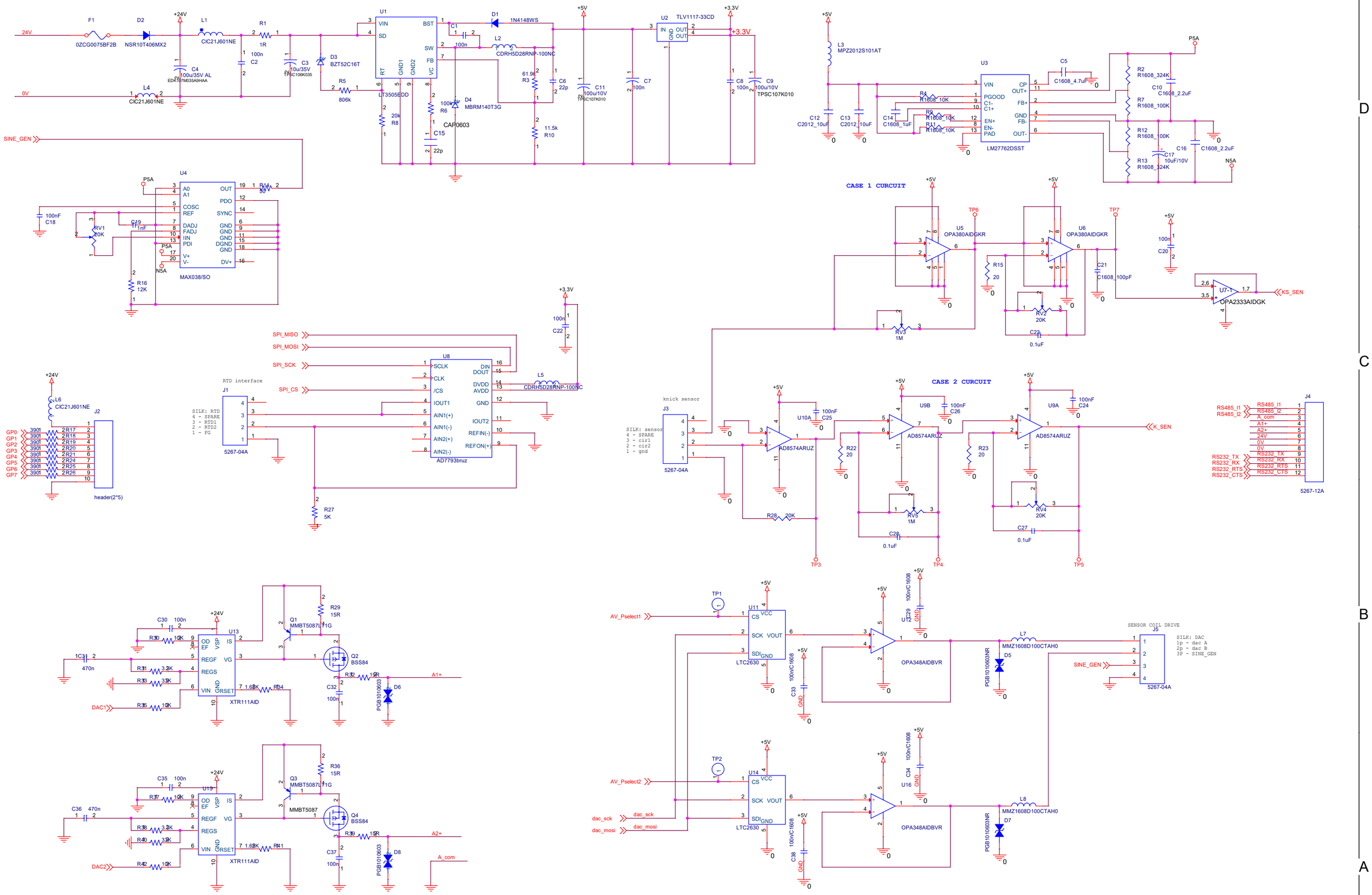

Title	<Title>
Size A2	Document Number <Doc>
Rev	<RevCode>
Date: Thursday, August 20, 2020	Sheet 1 of 2

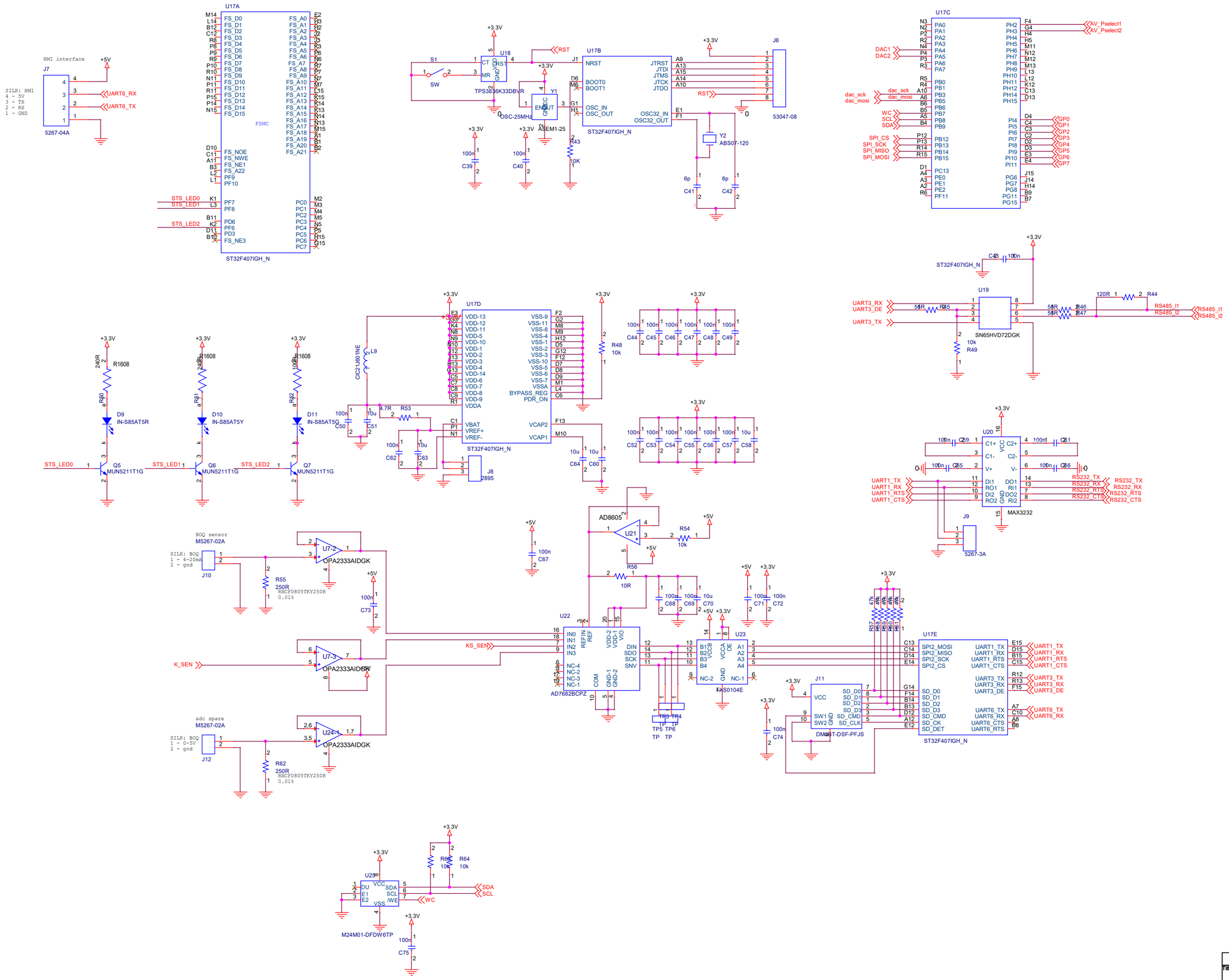

Title	<Title>
Size A2	Document Number <Doc>
Rev	<RevCode>
Date: Thursday, August 20, 2020	Sheet 2 of 2