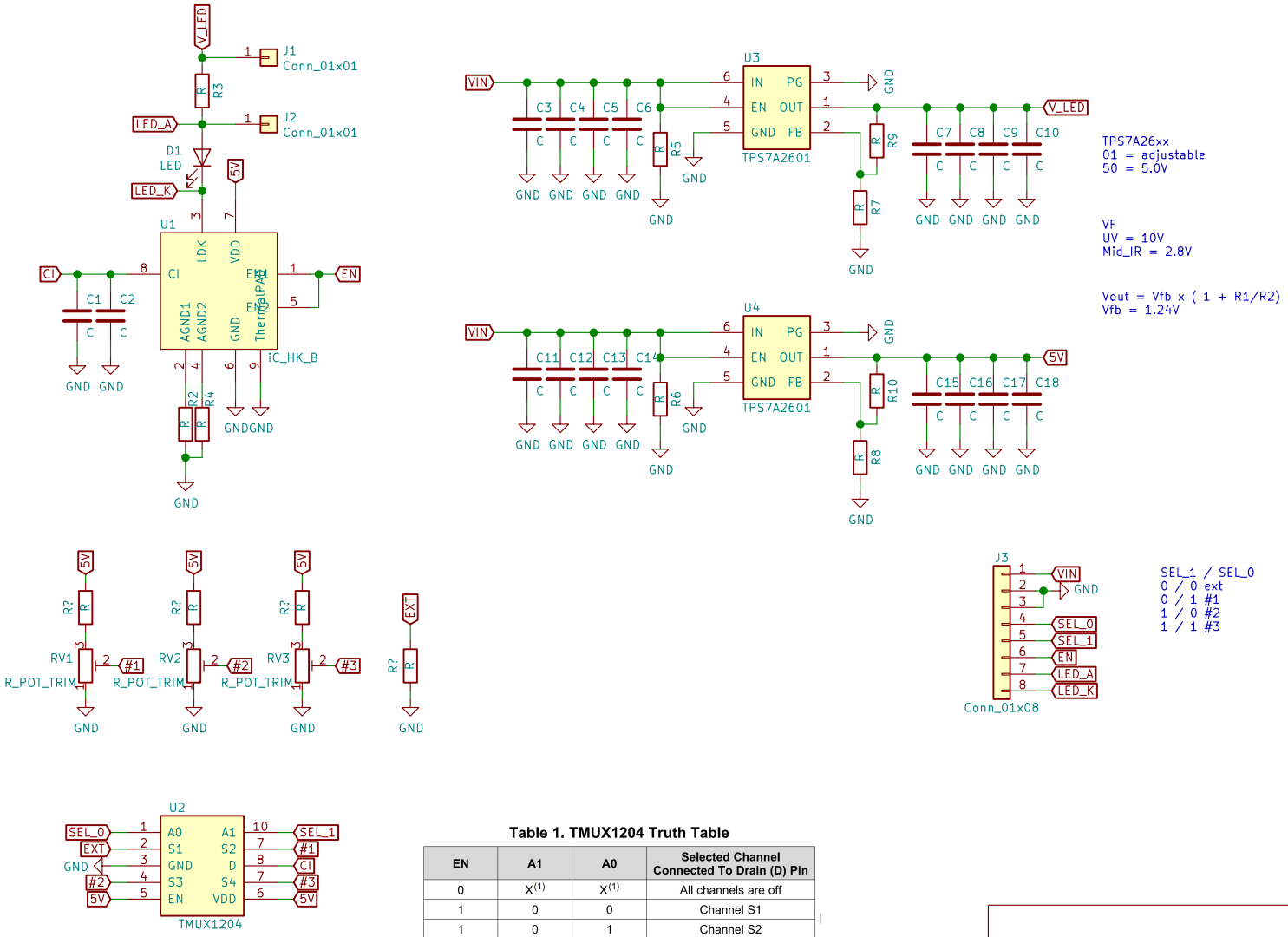

Table 1. TMUX1204 Truth Table

EN	A1	A0	Selected Channel Connected To Drain (D) Pin
0	X(1)	X(1)	All channels are off
1	0	0	Channel S1
1	0	1	Channel S2
1	1	0	Channel S3
1	1	1	Channel S4

Sheet: /
File: IR_LED.sch

Title:

Size: A4 | Date: | **Rev:**
KiCad E.D.A. kicad (5.1.4)-1 | Id: 1/1