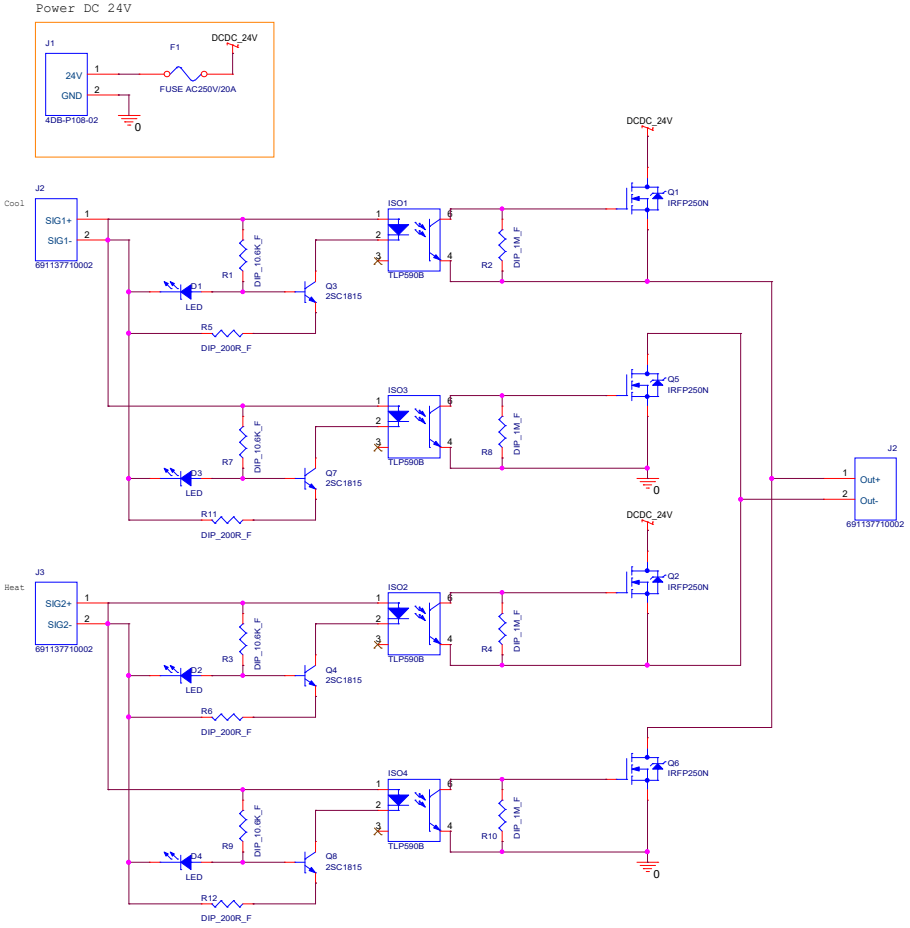

Title	PD,POWER SCHEMATIC		
Size C	Document Number ATIK		Rev A
Date: Friday, April 23, 2021	Sheet 1 of 1		