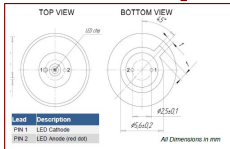

IR : LED22 (Roithner) 2pin
UV : OPTAN-275J-BL (Optanled) 3pin

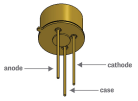

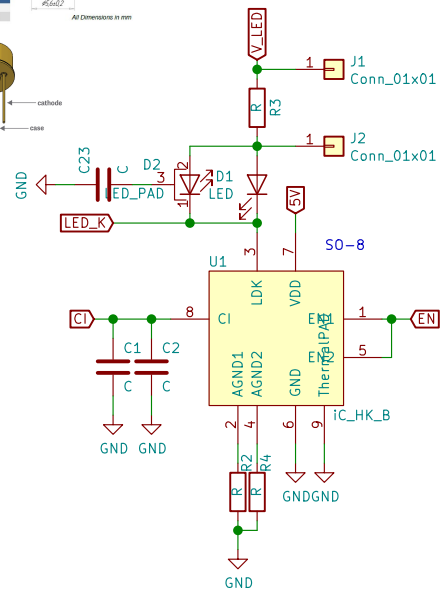

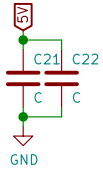

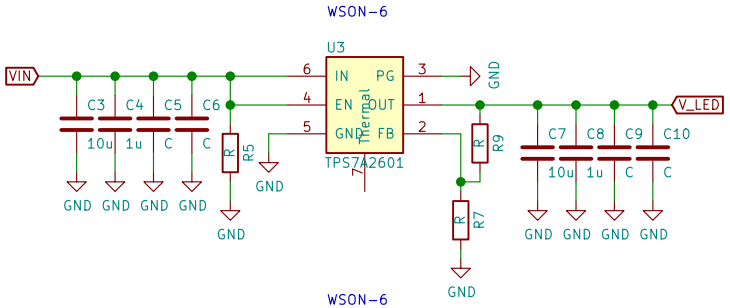

TPS7A26xx
01 = adjustable
50 = 5.0V

VF
UV = 10V
Mid_IR = 2.8V

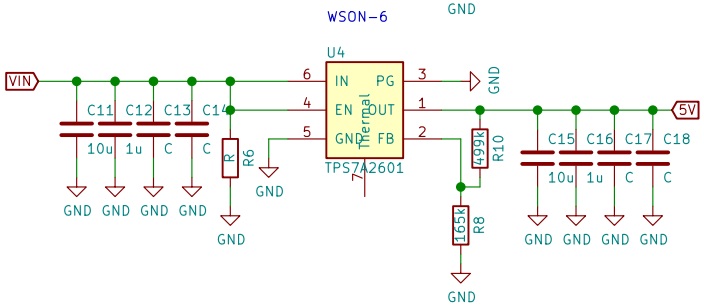

Vout = Vfb x (1 + R1/R2)
Vfb = 1.24V
5V = 1.24V x (1 + 499k / 165k)

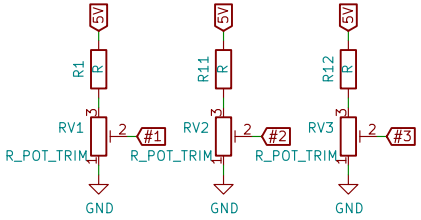

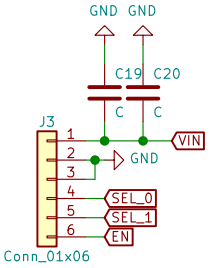

SEL_1 / SEL_0
0 / 0 ext
0 / 1 #1
1 / 0 #2
1 / 1 #3

53261-0871

VSSOP-10

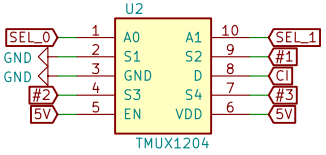

Table 1. TMUX1204 Truth Table

EN	A1	A0	Selected Channel Connected To Drain (D) Pin
0	X(1)	X(1)	All channels are off
1	0	0	Channel S1
1	0	1	Channel S2
1	1	0	Channel S3
1	1	1	Channel S4

Sheet: /
File: IR_LED.sch

Title:

Size: A4	Date:	Rev:
KiCad E.D.A. kicad (5.1.4)-1		Id: 1/1