Indian Institute of Information Technology Vadodara

SMART CROP CONDITION MONITORING WITH WIRELESS ALERT

Wireless Sensor Networks (CS314)

Group Details:

Name	Rollno
Ch.Rambhadra kumar	202311024
Annepu Adarsh	202311012
Ch.Punyamurthy	202311023

IIITV & IIITV-ICD

Aim:

The aim of this project is to design and implement a Wireless Sensor Network (WSN) based Smart Crop Condition Monitoring System that:

- Continuously monitors critical environmental parameters including soil moisture, temperature, relative humidity, and rainfall
- Transmits the collected sensor data wirelessly to a central monitoring unit or cloud platform
- Generates real-time wireless alerts (via SMS or mobile notification) when parameters deviate from predefined thresholds
- Enables farmers to take timely actions, thereby improving crop yield, reducing water wastage, and minimizing manual labor

Components

- Arduino
- Soil sensor
- DHT11
- nRF24L
- Buzzer
- LED
- Breadboard + Wires
- Capacitor

System Architecture

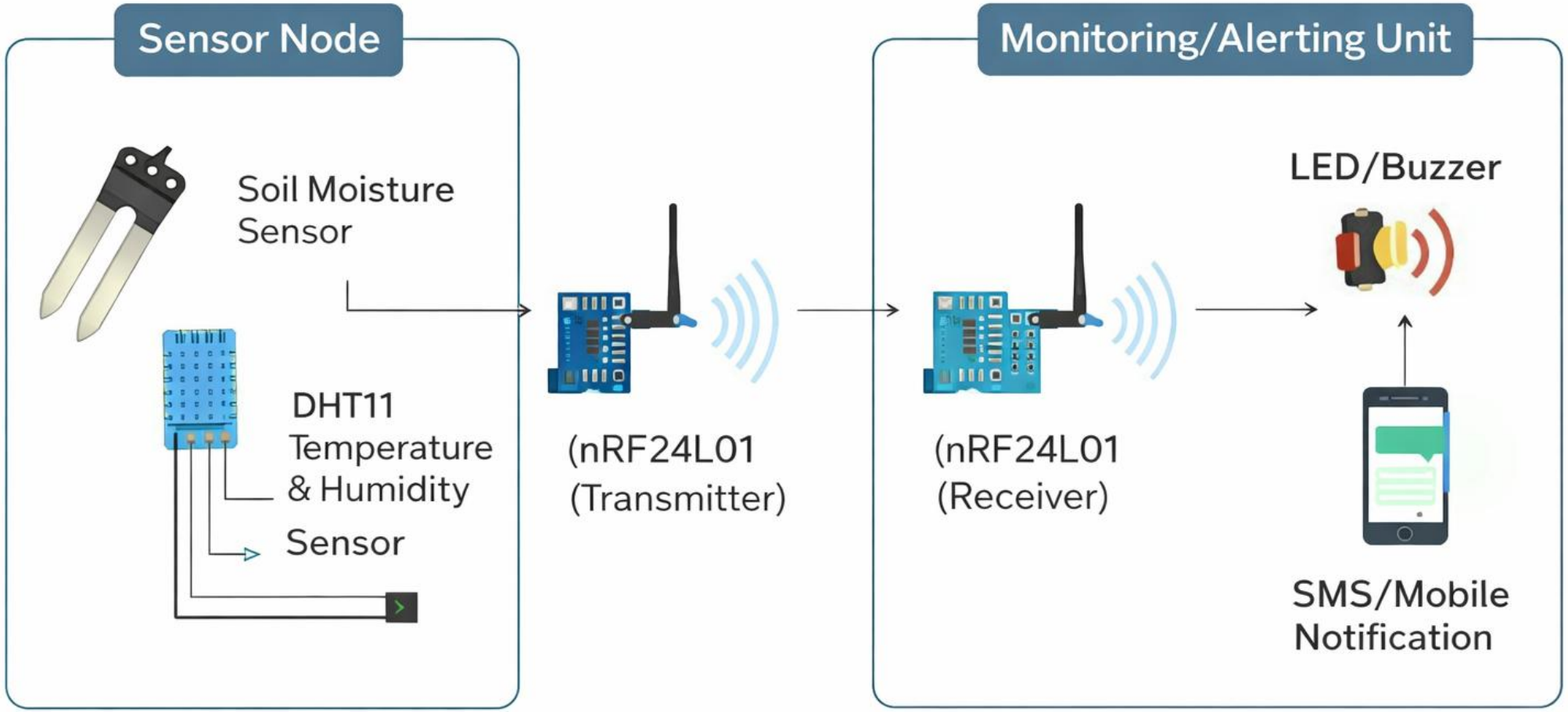

Circuit diagram:

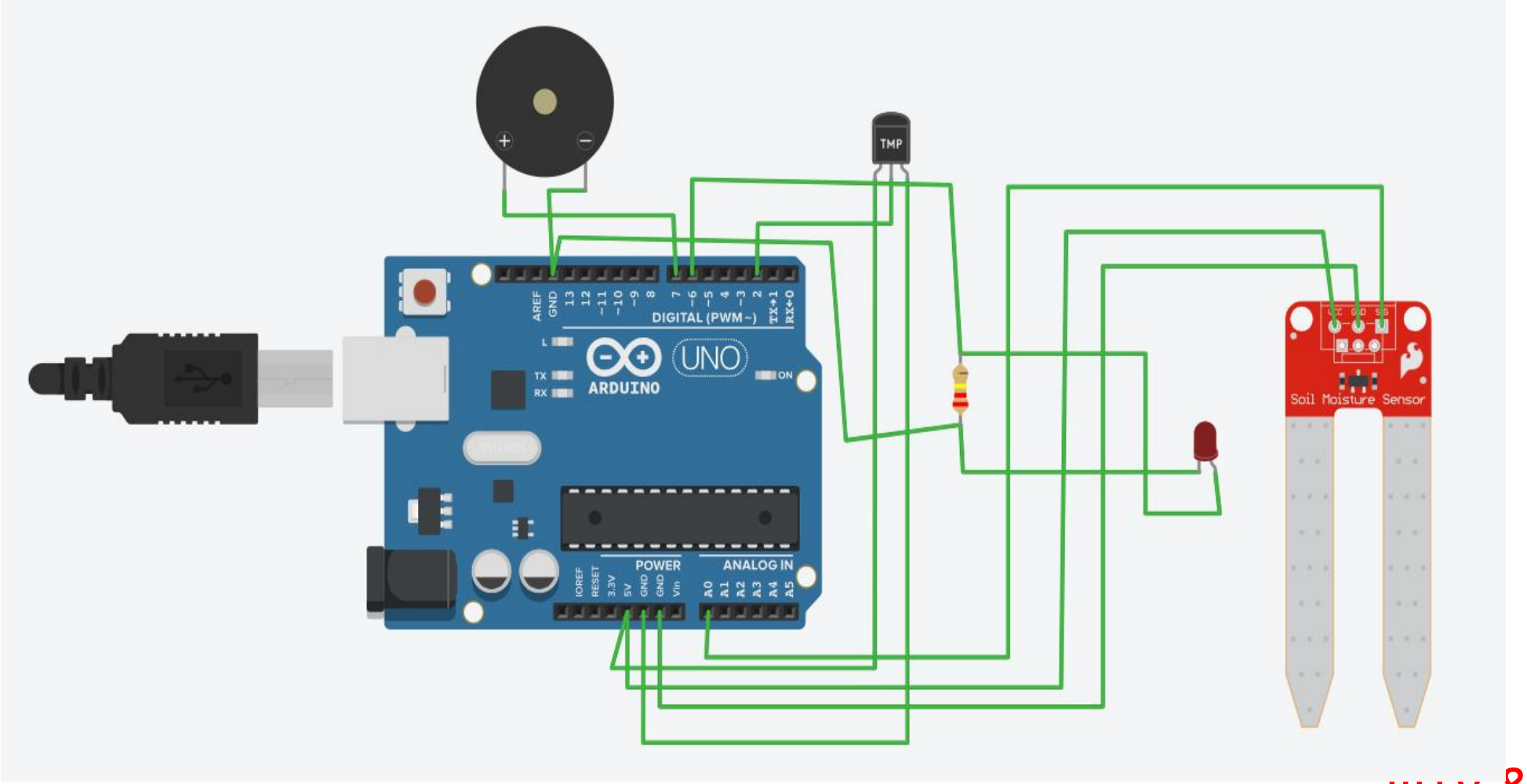

Work done so Far

This is the core of progress.

- Interfaced soil moisture sensor with Arduino
- Displayed sensor values on Serial Monitor
- Tested DHT11 for temperature & humidity
- Established basic communication using nRF24L01

Future Work

- SMS Internet Alert
- Smart irrigation system
- Data Analytics and prediction
- Larger field deployment
- Energy Optimization
- Website Integration

Reference:

Title : Wireless Sensor Networks for Agriculture: The State-of-the-Art in Practice and Future Challenges

Authors : T. Ojha, S. Misra, N.S. Raghuwanshi

Journal : Computers and Electronics in Agriculture

Year : 2015

DOI : 10.1016/j.compag.2015.08.011

Link : https://www.sciencedirect.com/science/article/pii/S0168169915002379