FILTER

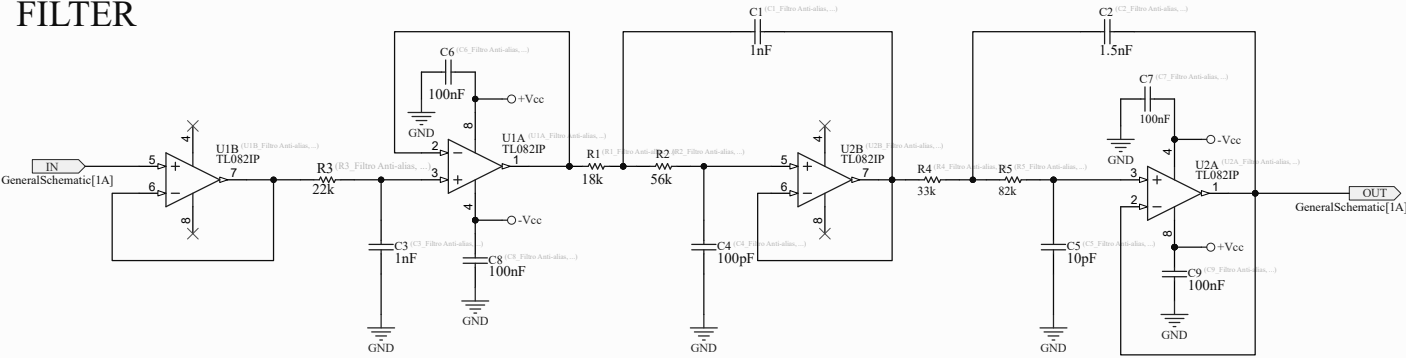
IN
GeneralSchematic[1A]
U1B
TL082IP
(U1B_Filtro Anti-alias, ...)
R3
(R3_Filtro Anti-alias, ...)
22k
C3
(C3_Filtro Anti-alias, ...)
1nF
GND
C6
(C6_Filtro Anti-alias, ...)
100nF
GND
+Vcc
-Vcc
U1A
TL082IP
(U1A_Filtro Anti-alias, ...)
C8
(C8_Filtro Anti-alias, ...)
100nF
GND
R1
(R1_Filtro Anti-alias, ...)
18k
R2
(R2_Filtro Anti-alias, ...)
56k
C1
(C1_Filtro Anti-alias, ...)
1nF
C4
(C4_Filtro Anti-alias, ...)
100pF
GND
U2B
TL082IP
(U2B_Filtro Anti-alias, ...)
R4
(R4_Filtro Anti-alias, ...)
33k
R5
(R5_Filtro Anti-alias, ...)
82k
C2
(C2_Filtro Anti-alias, ...)
1.5nF
C5
(C5_Filtro Anti-alias, ...)
10pF
GND
C7
(C7_Filtro Anti-alias, ...)
100nF
GND
-Vcc
U2A
TL082IP
(U2A_Filtro Anti-alias, ...)
+Vcc
C9
(C9_Filtro Anti-alias, ...)
100nF
GND
OUT
GeneralSchematic[1A]