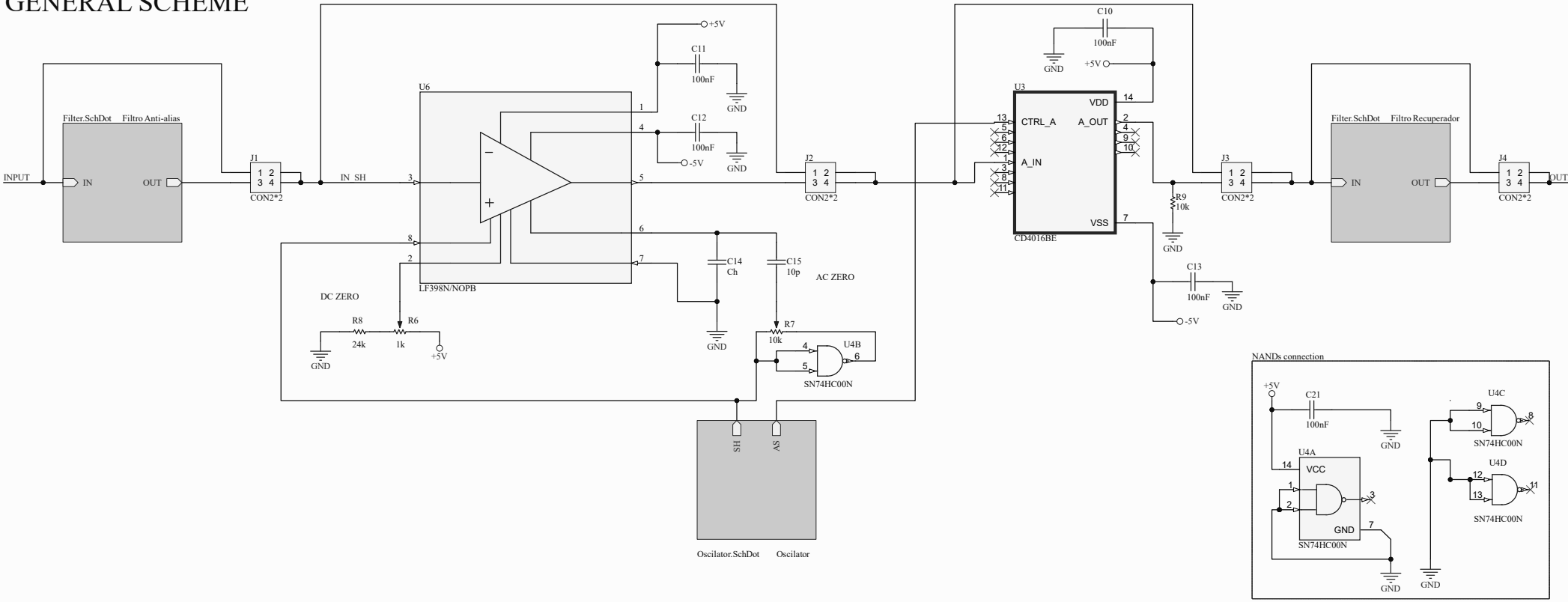GENERAL SCHEME