OSCILATOR

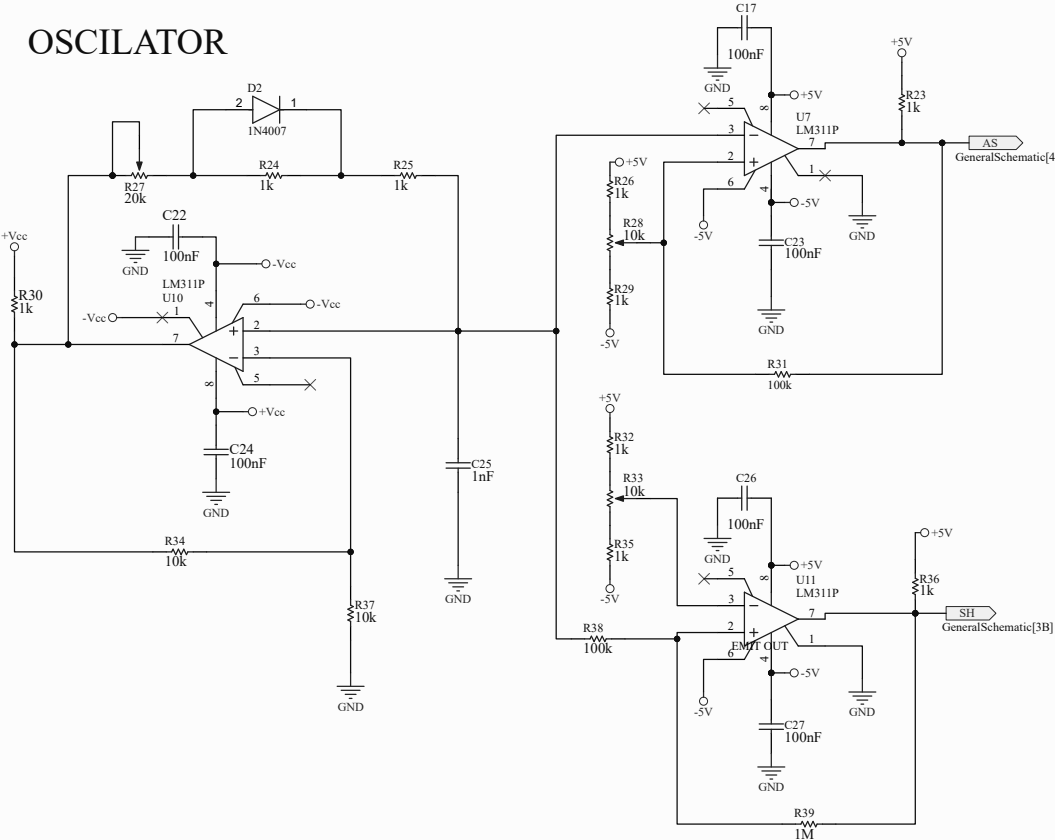
D2
1N4007
R27
20k
R24
1k
R25
1k
C22
100nF
GND
+Vcc
R30
1k
-Vcc
LM311P
U10
C24
100nF
C25
1nF
R34
10k
R37
10k
C17
100nF
+5V
U7
LM311P
R23
1k
AS
GeneralSchematic[4
R26
1k
R28
10k
R29
1k
-5V
C23
100nF
R31
100k
R32
1k
R33
10k
R35
1k
C26
100nF
U11
LM311P
R36
1k
SH
GeneralSchematic[3B]
R38
100k
EMIT OUT
C27
100nF
R39
1M