SIGNALS

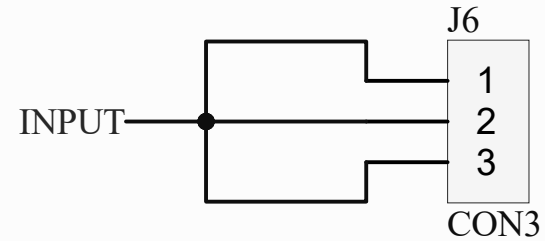

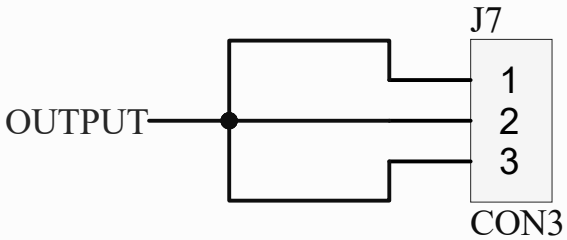

INPUT
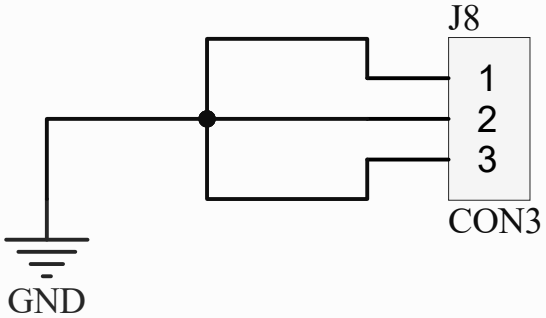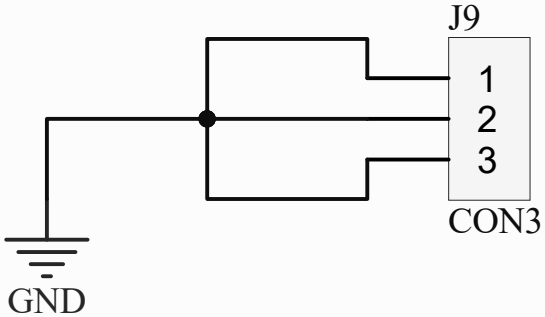
INPUT