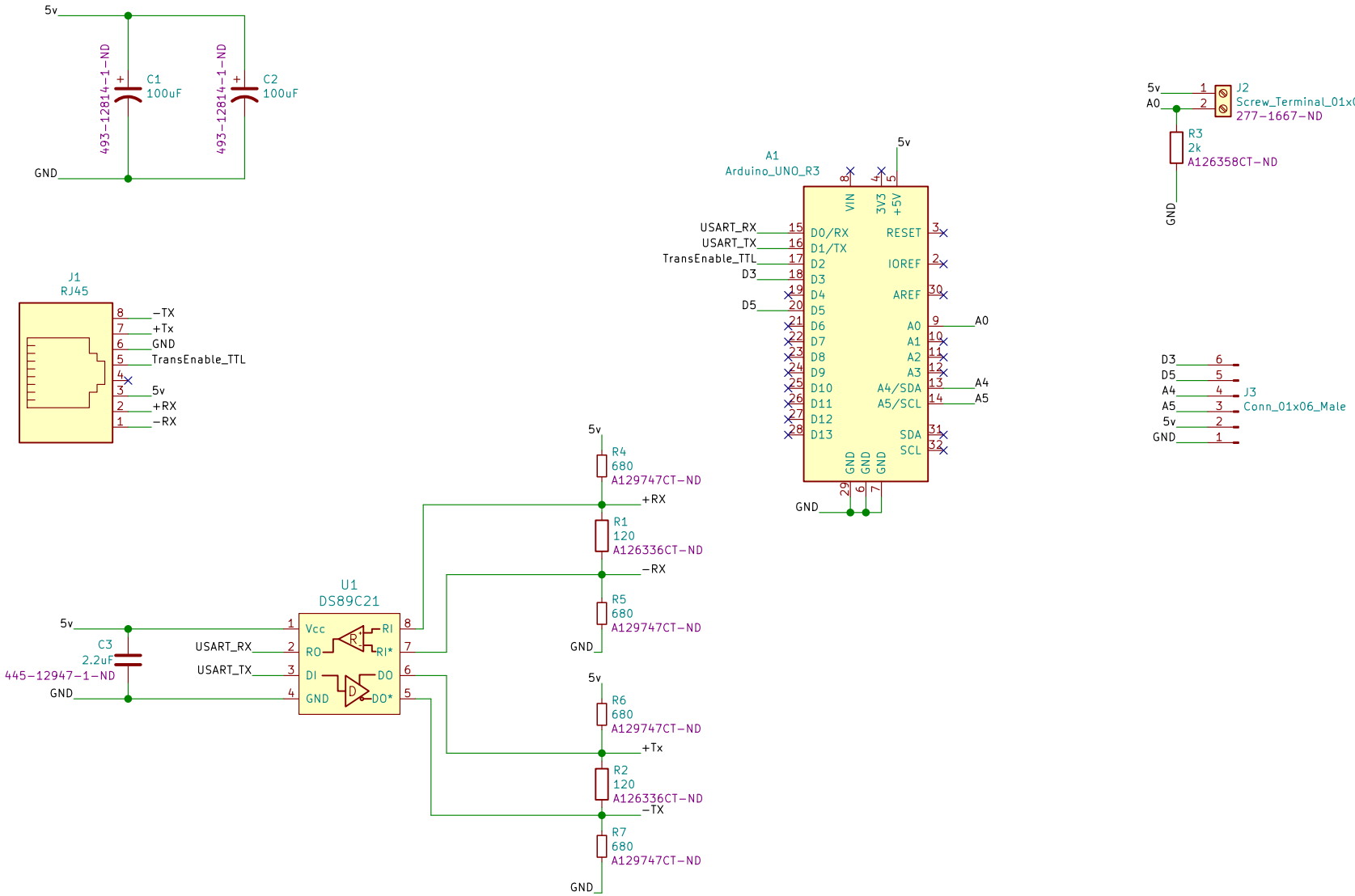

Loma Incorporated

Sheet: /

File: Operator.sch

Title: Operator Controls

Size: USLetter	Date: 2019-03-20	**Rev: 1**
KiCad E.D.A. kicad 5.0.0-fee4fd165ubuntu17.10.1		Id: 1/1