COURSE: DPT **EXERCISE NO:** PP-01

EXERCISE NAME: Hand Injection moulding machine

1.	**Objective**	To study of machine in Idle run observation (IRO) & produce 10 articles by using hand injection moulding machine at optimize cycle time and calculate the production rate.
2.	**Machine/ eqt. / Accessories / Tools required**	Hand injection Moulding Machine, Mould, Mould alignment plates, silicon spray, Cotton, Material, Brass rod, Air Blower, Gloves & Hand pyrometer.
3.	**Principle**	A moulding procedure whereby a heat-softened plastic material is forced from a cylinder into a relatively cold mould giving the article the desired shape. Injection moulding is a manufacturing technique where a molten plastic is injected at high pressure into a closed mould which is the inverse of the desired shape.
4	**Machine Specifications**	Make – Kumar Engineering Works Shot Capacity – 1 OZ Clamp Force - Manual
5.	**Procedure**	……..
6.	**Diagram**	Draw the diagram of Machine and M**achine** Parts: Nozzle, Torpedo, Hopper, Rack & Pinion Arrangements, Barrel, Band Heater, etc
7.	**Result & Conclusion**	1.Production rate per hour = 3600 X No of cavity/ cycle time in seconds.
8.	**Safety**	1. Don't touch hot barrel 2. Switch off heater in case of fumes / signs of degradation. 3. Wear safety goggles & gloves. 4. Hold safety shield in position when purging melt from the barrel. 5. Follow strictly Do's & don'ts.
9	**Precautions**	1. Use correct grade of material. 2. Ensure the temperature controller is working properly. 3. Dry material if required. 4. Ensure proper lubrication of movable parts. 5. Ensure mould centering. 6. Ensure proper cooling.

Diagram:

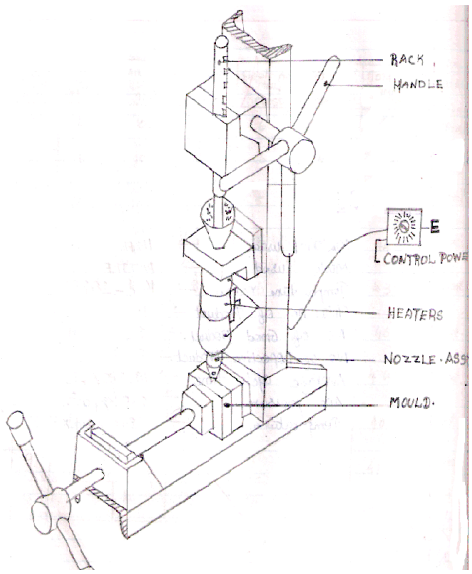

FIG: Hand Injection Moulding Machine

Observation During Practical-

1. **Material Name –**
2. **Machine Name –**
3. **Temperature -**
4. **Product Name -**

TABLE NO.: Observation Calculation

S. No	Mould closing time (sec)	Injection time (sec)	Hold on time (sec)	Cooling time (sec)	Mould opening time (sec)	Ejection time(sec)	Total cycle time (sec)
1							
2							
3							
4							
…							
10							

Average cycle time = Total time / no of product

Production rate per hour = 3600 X No of cavity/ avg. cycle time

Production rate per shift = $\frac{3600 \text{ X No of cavity}}{\text{avg. cycle time}}$ X8

TABLE: Moulding defects observed

S. No.	Short shot	Flash	Voids	Sink marks	Weld line	Burn marks	Cracks	Discoloration	Jetting	Finish Good
1st Shot										
2nd Shot										
3rd Shot										
4th Shot										
5th Shot										
…										
10th Shot										