EXERCISE ON SKILL ORIENTED PRACTICAL EXERCISES

COURSE: MOPP/MOIM
NO: PP- 02

EXERCISE

EXERCISE NAME: Study Scrap Grinding m/c in IRO and parts function

1.	**Objective**	To study Scrap Grinding m/c (IRO) & Practical exercise on Scrap Grinding m/c.
2.	**Machine/ eqt. / Accessories / Tools reqd.**	(i) Tools used (ii) Material Used – Plastic Scrap (iii) Goggles, gloves, Ear Plugs, & Mask
3.	**Safety**	1) Wear safety goggles & gloves. 2) Follow strictly Do's & don'ts.
4.	**Principle**	Cutting the scrap into smaller pieces to obtain ease of processes.
5.	**Part and its function**	1. motor 2. feed hopper 3. belt drive 4. blades 5.mesh – छलनी 6.cullection box 7. on/off switch Etc.
6.	**Diagram**	--------
7.	**Observation**	Make a note of data generated
8.	**Result & Conclusion**	Acquired Knowledge of the parts operating mechanism and effect of parameters of machine.
9.	**Precautions**	1. use Ear Plugs 2. don't put the hand in the the hopper

Observation/ Calculation :

S. No.	Input of Plastic Material	Output of Plastic Material	Actual Output of the m/c	Efficiency of the m/c
1.				
2.				
3.				

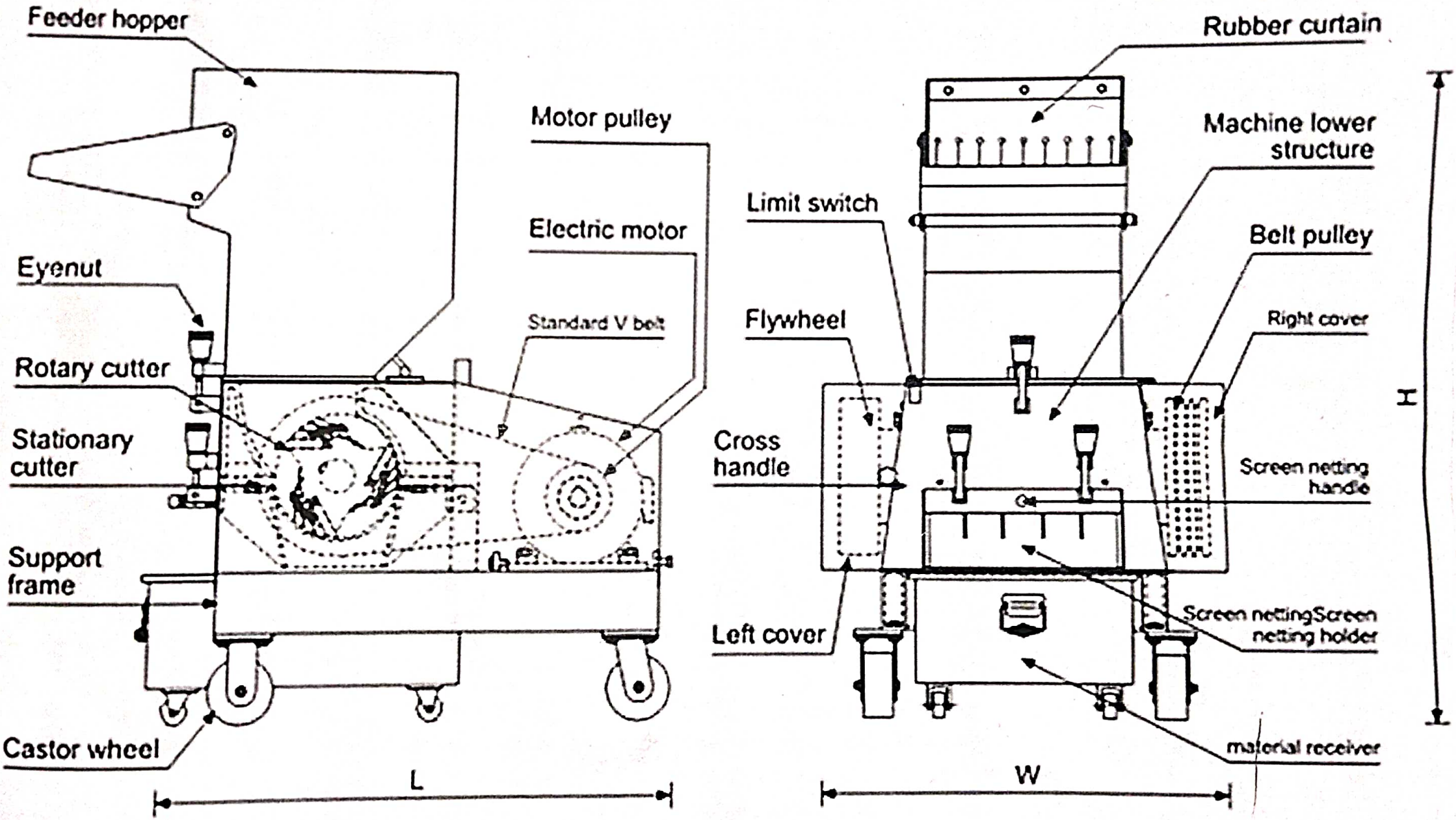
Feeder hopper
Motor pulley
Electric motor
Eyenut
Standard V belt
Rotary cutter
Stationary cutter
Support frame
Castor wheel
L
Rubber curtain
Machine lower structure
Limit switch
Belt pulley
Flywheel
Right cover
Cross handle
Screen netting handle
Left cover
Screen nettingScreen netting holder
material receiver
W
H