Smart Objects: The "Things" in IoT

SENSORS, ACTUATORS, AND SMART OBJECTS

- Sensors are fundamental building blocks of IoT networks
- Sensors are the foundational elements found in smart objects—the "things" in the Internet of Things

- Smart objects are any physical objects that contain embedded technology to sense and/or interact with their environment in a meaningful way by being interconnected and enabling communication among themselves or an external agent.

  - **A sensor** : It senses
  - More specifically, a sensor measures some physical quantity and converts that measurement reading into a **digital representation.**
  - That digital representation is typically passed to another device for transformation into useful data that can be consumed by intelligent devices or humans
  - Sensors are not limited to human like sensory data.
  - They are able to provide an extremely wide spectrum of rich and diverse measurement data with far greater precision than human senses.

Categories

- Active or passive:
- Sensors can be categorized based on whether they **produce** an **energy output** and typically **require** an **external power supply (active)**
- Whether they **simply receive energy** and typically require **no external power supply (passive).**
- Sensors can be categorized based on the **physical mechanism used to measure sensory input** (*for example*, *thermoelectric, electrochemical, piezoresistive, optic, electric, fluid mechanic, photoelastic*).

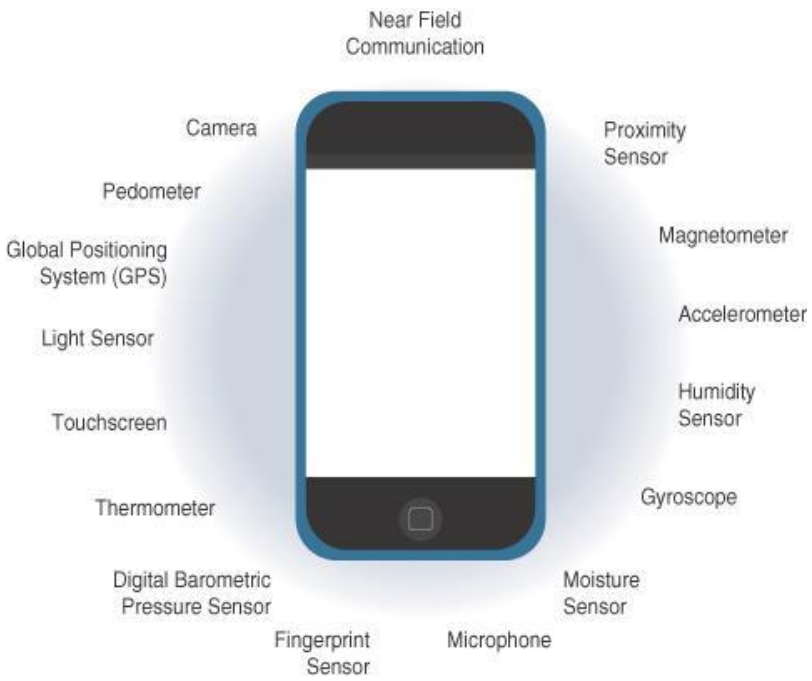

Actuators:-

- Actuators are natural complements to sensors
- Sensors are designed to sense and measure practically any measurable variable in the physical world.
- They convert their measurements (typically Analog) into electric signals or digital representations that can be consumed by an intelligent agent (**a device or a human**).
- Actuators, on the others hand, receive some type of control signal (commonly an **electric signal** or **digital command**) that triggers a physical effect, usually some type of motion, force, and so on.
- Sensors provide the information, actuators provide the action

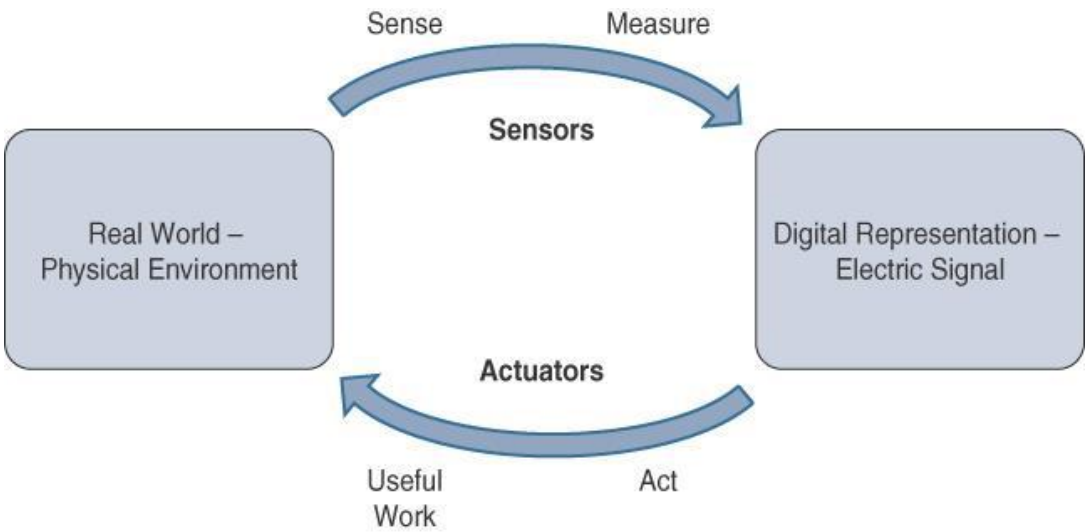

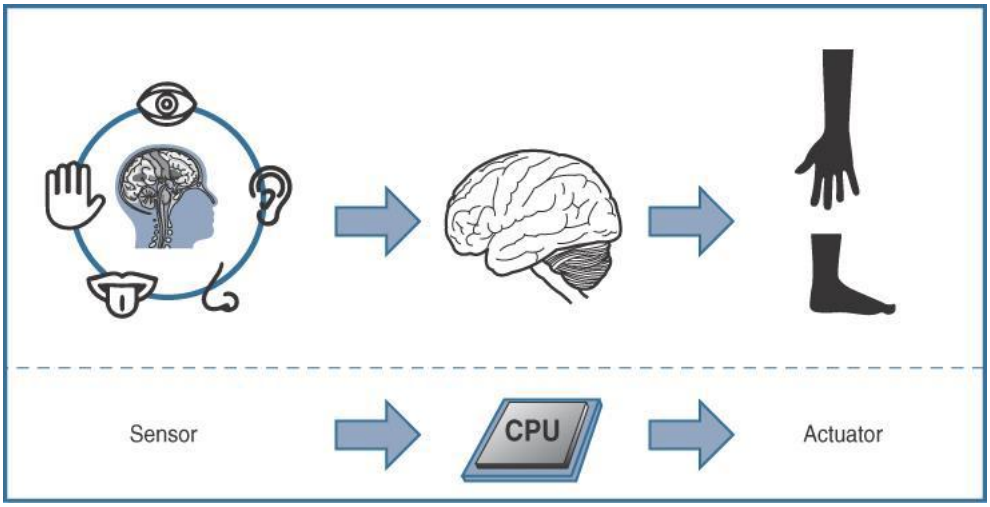

- Actuators also vary greatly in function, size, design, and so on.
- Some common ways that they can be classified include the following:
- **<u>Type of motion:</u>**

Actuators can be classified based on the type of motion they produce (for example, **linear**, **rotary**, **one/two/three-axes**).

- **<u>Power</u>**:
  Actuators can be classified based on their power output (for example, **high power, low power, micro power**.)

Binary or continuous:

Actuators can be classified based on the number of stable state outputs.

Area of application:

Actuators can be classified based on the specific **industry** or vertical where they are used.

Type of energy:

Actuators can be classified based on their energy type.

Smart Objects

- Smart objects are, quite simply, the building blocks of IoT
- The real power of smart objects in IoT comes from being networked together rather than being isolated as standalone objects.
- If a sensor is a standalone device that simply measures the humidity of the soil , it is interesting and useful, but it isn't revolutionary.
- If that same sensor is connected as part of an intelligent network that is able to coordinate intelligently with **actuators** to **trigger** irrigation systems as needed based on those sensor readings , we have something far more powerful.

A smart object , is a device that has, at a minimum, the following four defining characteristics

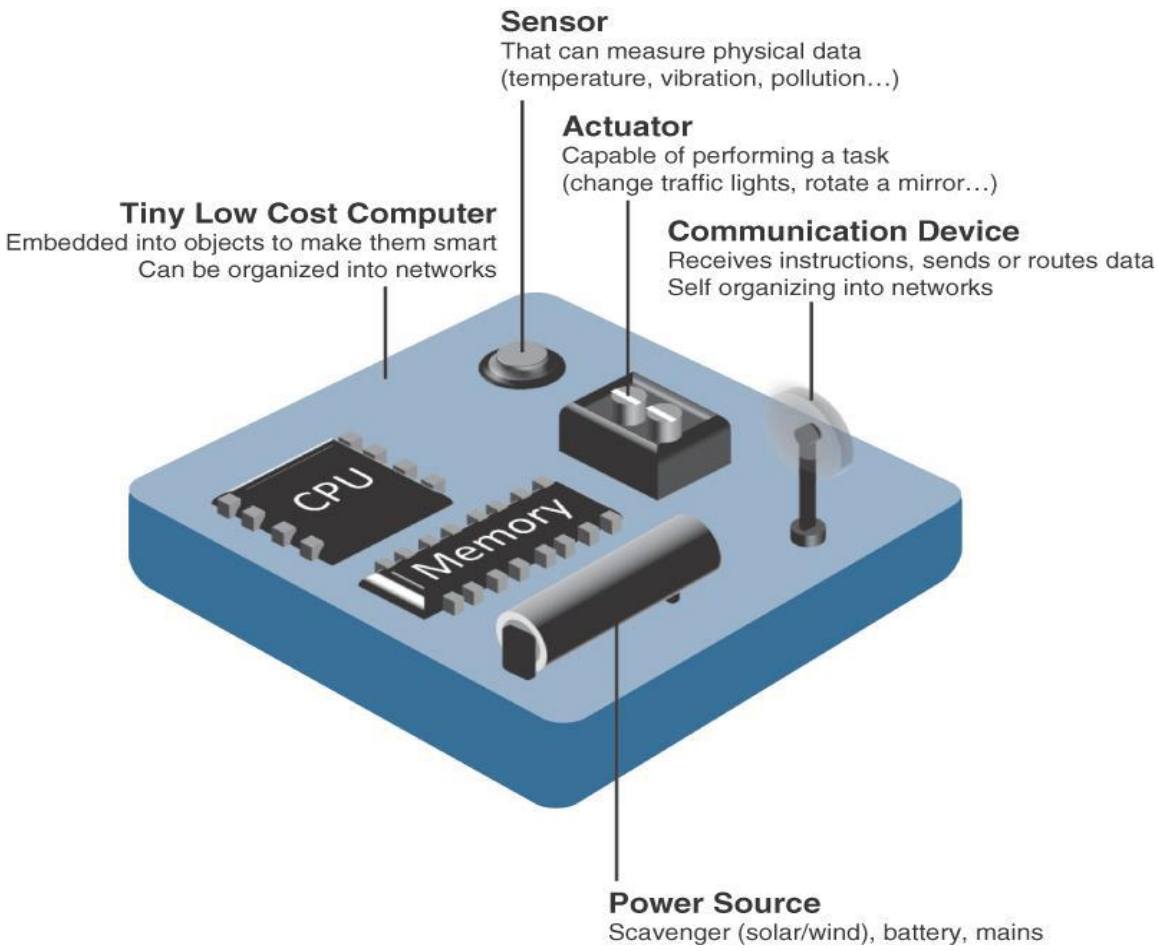

Trends in Smart Objects

- Size is decreasing
- Power consumption is decreasing
- Power consumption is decreasing
- Communication capabilities are improving
- Communication is being increasingly standardized

SENSOR NETWORKS

- A sensor/actuator network (SANET), is a network of sensors that sense and measure their environment and/or actuators that act on their environment.
- The sensors and/or actuators in a SANET are capable of communicating and cooperating.
- SANETs offer highly coordinated sensing and actuation capabilities.
- Smart homes are a type of SANET that display this coordination between distributed sensors and actuators.
- For example, smart homes can have temperature sensors that are strategically networked with Heating, Ventilation, and Air-conditioning (**HVAC**) Actuators.
- When a sensor detects a specified temperature this can trigger an actuator to take action and heat or cool the home as needed.

Advantages and Disadvantages that a wireless-based solution offers:

Advantages:

- Greater deployment flexibility (especially in extreme environments or hard to reach places).
- Simpler scaling to a large number of nodes
- Lower implementation costs
- Easier long term maintenance
- Effortless introduction of new sensor/actuator nodes
- Better equipped to handle dynamic/rapid topology changes

Disadvantages:

- Potentially less secure (for example, hijacked access points)
- Typically lower transmission speeds
- Greater level of impact/influence by environment

Wireless Sensor Networks (WSNs)

- Wireless sensor networks are made up of wirelessly connected smart objects, which are sometimes referred to as motes.
- The fact that there is no infrastructure to consider with WSNs is surely a powerful advantage for flexible deployments, but there are a variety of design constraints to consider with these wirelessly connected smart objects.

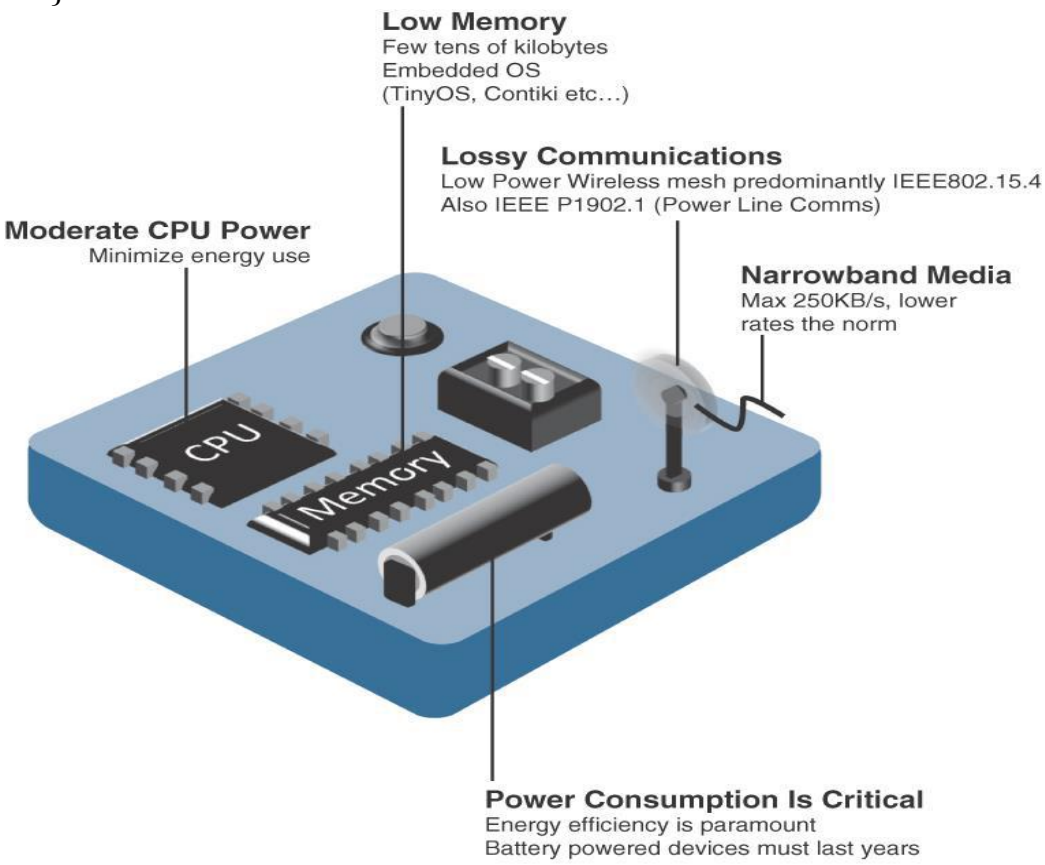

COMMUNICATIONS CRITERIA:-

The characteristics and attributes you should consider when selecting and dealing with connecting smart objects.

- Range
- Frequency Bands
- Power Consumption
- Topology
- Constrained Devices
- Constrained Node Networks:

Range:-
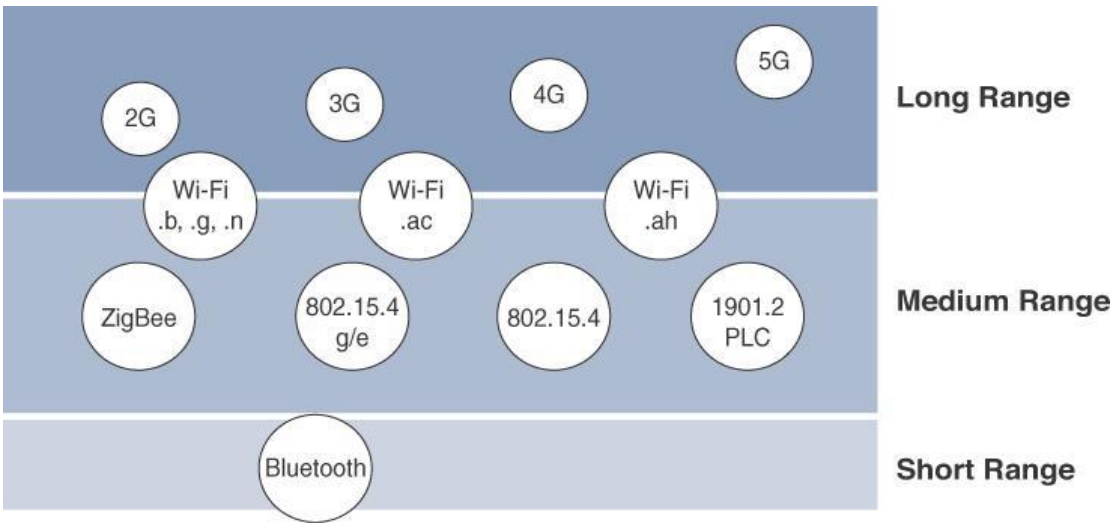
- How far does the signal need to be propagated?
- That is, what will be the area of coverage for a selected wireless technology?