Rancho High School
Las Vegas, Nevada

Colorimetry SafeStamps

- SafeStamps - I2C Connected Standardized Modules
- LED SafeStamp to provide light source inside colorimeter
    - Uses CREE XREWHT-L1-0000-006E5
    - Controllable intensity by ATTINY48 and MOSFET
- Color Sensor SafeStamp to measure transmittance of red, green, blue, and total light
    - Uses Vishay VEML6040A3OG
- Dominant wavelength and absorbance spectrum can be approximated from returned RGB data.
    - Color curves of LED and Color Sensor must be accounted for.
    - Accuracy is non-scientific but sufficient for physics demonstration/puzzle

James Rowley - November 10, 2015

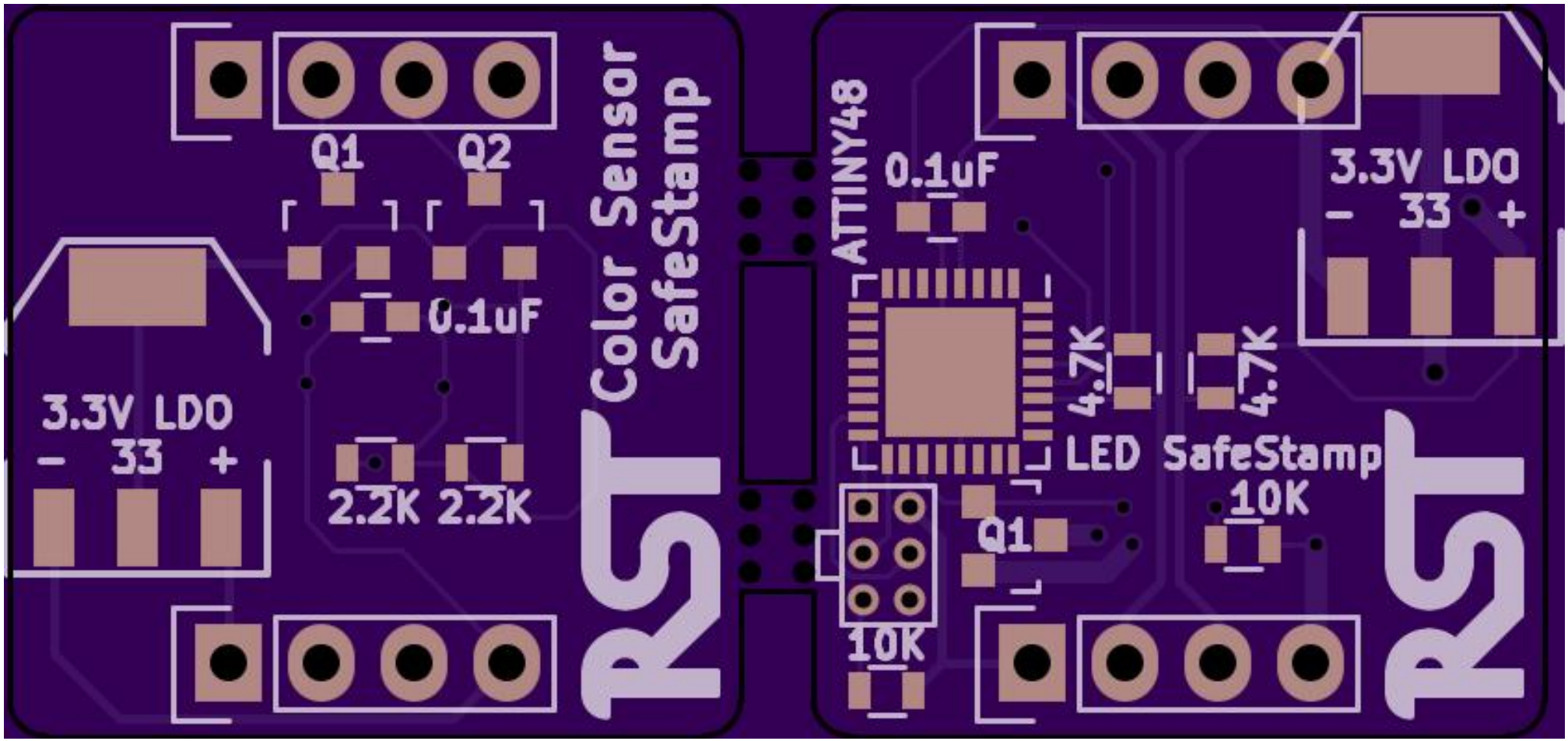
Q1
Q2
0.1uF
3.3V LDO
- 33 +
2.2K 2.2K
Color Sensor
SafeStamp
RST
ATTINY48
0.1uF
4.7K
4.7K
LED SafeStamp
10K
Q1
10K
3.3V LDO
- 33 +
RST

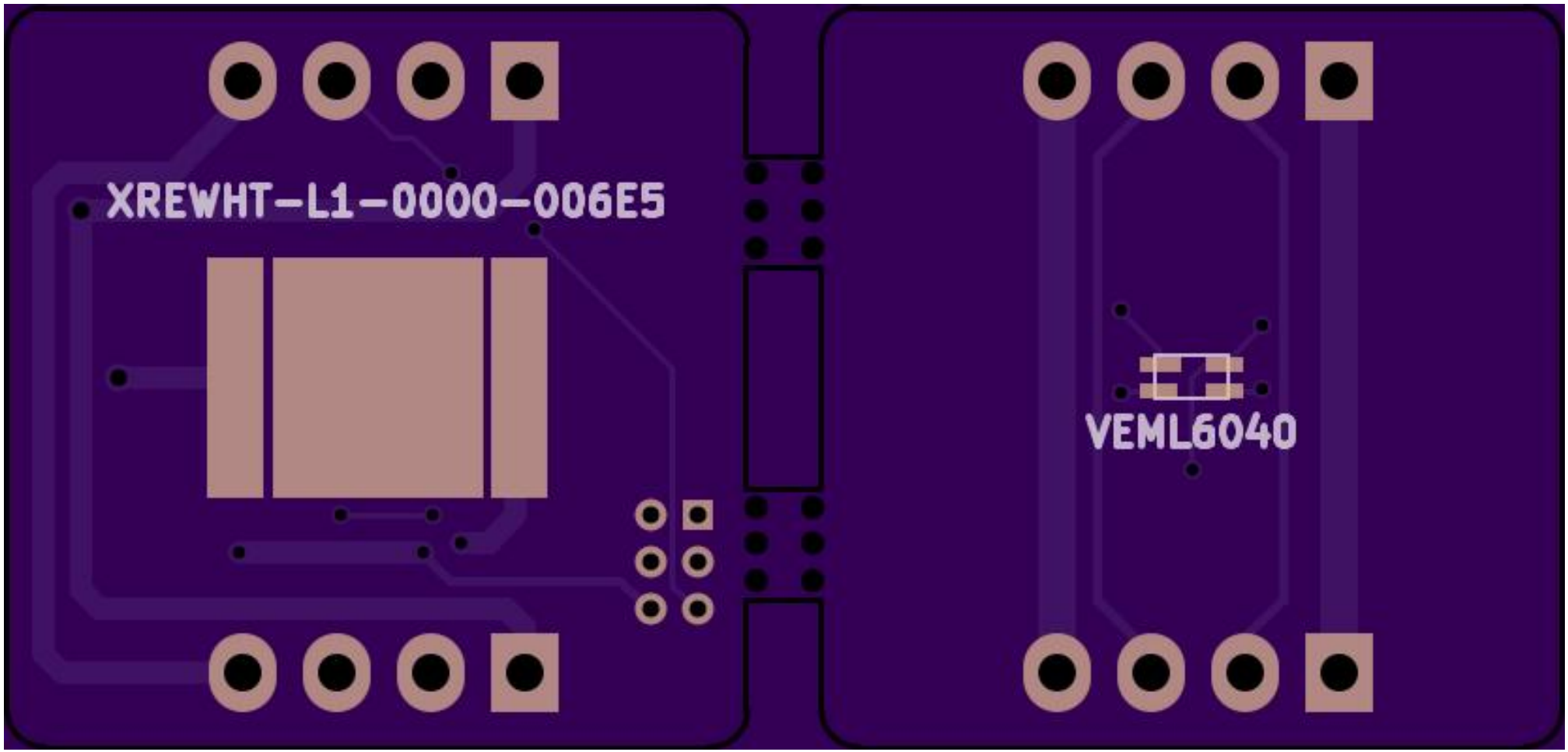
XREWHT-L1-0000-006E5
VEML6040

Color Sensor SafeStamp

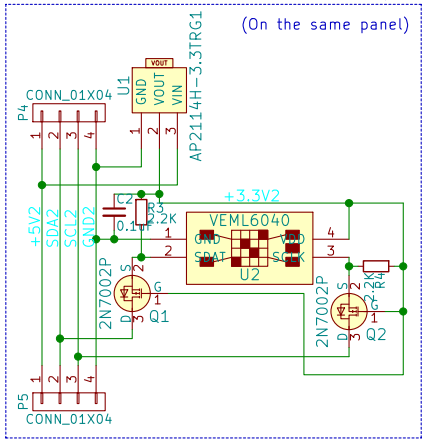

White LED SafeStamp

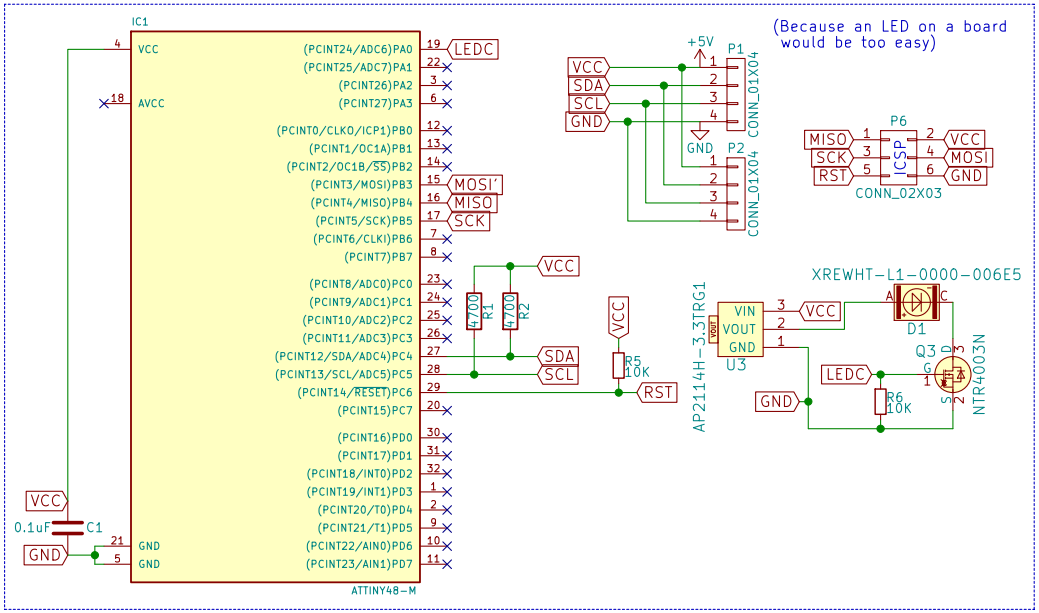

James Rowley
Rancho Safecracking

Sheet: /
File: LEDCarrier.sch

Title: Colorimetry SafeStamps

Size: A4	Date: Monday, November 09, 2015	**Rev: 1**
KiCad E.D.A. kicad (2015-09-02 BZR 6149, Git 4a56ee4)-product		Id: 1/1

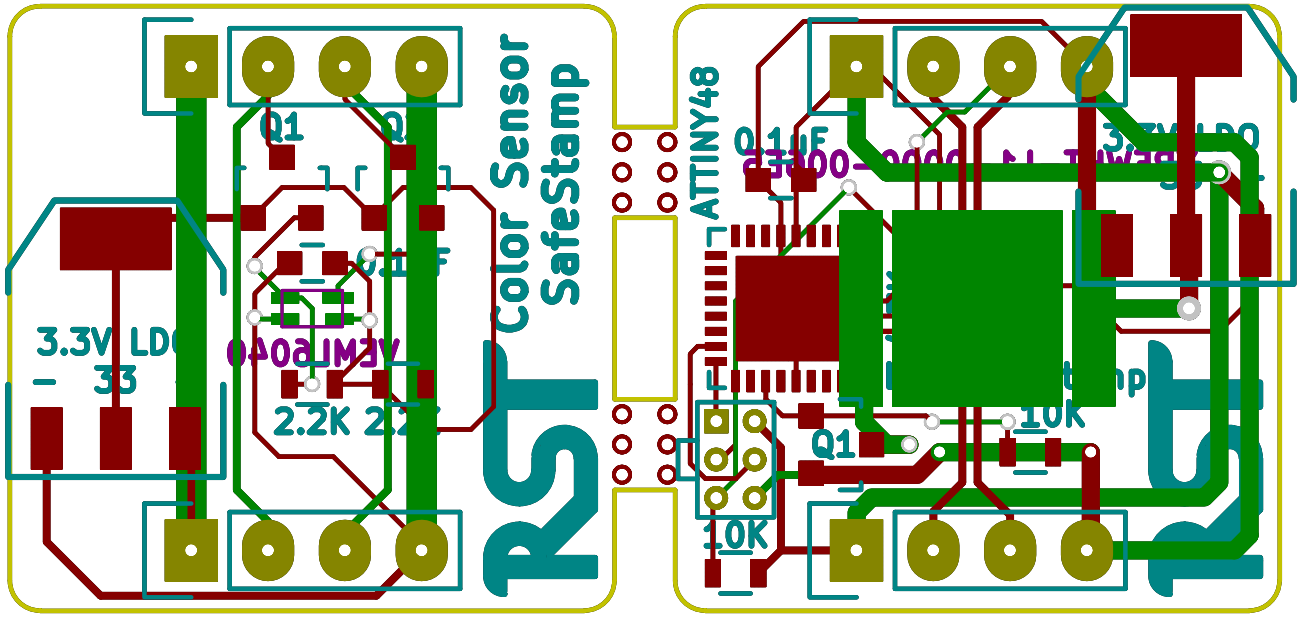
Color Sensor
SafeStamp
ATTINY48
Q1
3.3V LDO
33
2.2K
10K
Q1
10K

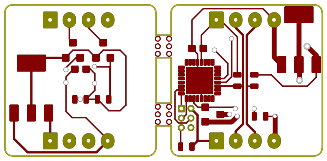

James Rowley
Rancho Safecracking
Sheet:
File: LEDCarrier.kicad_pcb

Title: LED and Color Sensor SafeStamps

Size: USLetter	Date: 2015-11-10	**Rev: 1**
KiCad E.D.A. kicad (2015-09-02 BZR 6149, Git 4a56ee4)-product		Id: 1/1

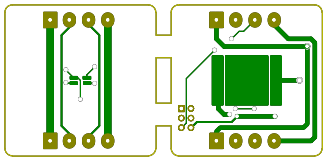

James Rowley
Rancho Safecracking
Sheet:
File: LEDCarrier.kicad_pcb

Title: LED and Color Sensor SafeStamps

Size: USLetter	Date: 2015-11-10	**Rev: 1**
KiCad E.D.A. kicad (2015-09-02 BZR 6149, Git 4a56ee4)-product		Id: 1/1

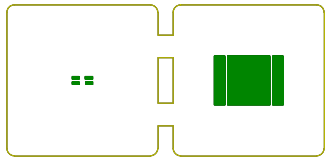

James Rowley
Rancho Safecracking
Sheet:
File: LEDCarrier.kicad_pcb

Title: LED and Color Sensor SafeStamps

Size: USLetter	Date: 2015-11-10	**Rev: 1**
KiCad E.D.A. kicad (2015-09-02 BZR 6149, Git 4a56ee4)-product		Id: 1/1

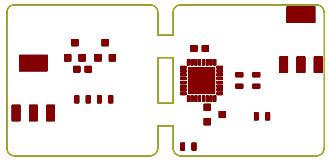

James Rowley
Rancho Safecracking
Sheet:
File: LEDCarrier.kicad_pcb

Title: LED and Color Sensor SafeStamps

Size: USLetter	Date: 2015-11-10	**Rev: 1**
KiCad E.D.A. kicad (2015-09-02 BZR 6149, Git 4a56ee4)-product		Id: 1/1

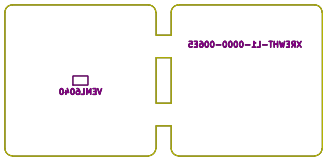

James Rowley
Rancho Safecracking
Sheet:
File: LEDCarrier.kicad_pcb

Title: LED and Color Sensor SafeStamps

Size: USLetter	Date: 2015-11-10	**Rev: 1**
KiCad E.D.A. kicad (2015-09-02 BZR 6149, Git 4a56ee4)-product		Id: 1/1

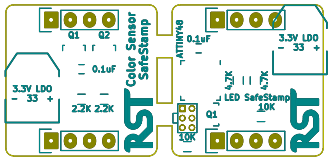

James Rowley

Rancho Safecracking

Sheet:

File: LEDCarrier.kicad_pcb

Title: LED and Color Sensor SafeStamps

Size: USLetter	Date: 2015-11-10	**Rev: 1**
KiCad E.D.A. kicad (2015-09-02 BZR 6149, Git 4a56ee4)-product		Id: 1/1

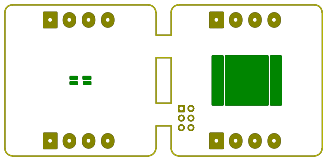

James Rowley
Rancho Safecracking
Sheet:
File: LEDCarrier.kicad_pcb

Title: LED and Color Sensor SafeStamps

Size: USLetter	Date: 2015-11-10	**Rev: 1**
KiCad E.D.A. kicad (2015-09-02 BZR 6149, Git 4a56ee4)-product		Id: 1/1

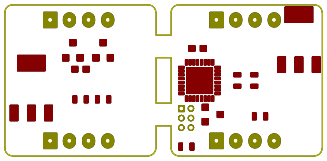

James Rowley
Rancho Safecracking
Sheet:
File: LEDCarrier.kicad_pcb

Title: LED and Color Sensor SafeStamps

Size: USLetter	Date: 2015-11-10	**Rev: 1**
KiCad E.D.A. kicad (2015-09-02 BZR 6149, Git 4a56ee4)-product		Id: 1/1

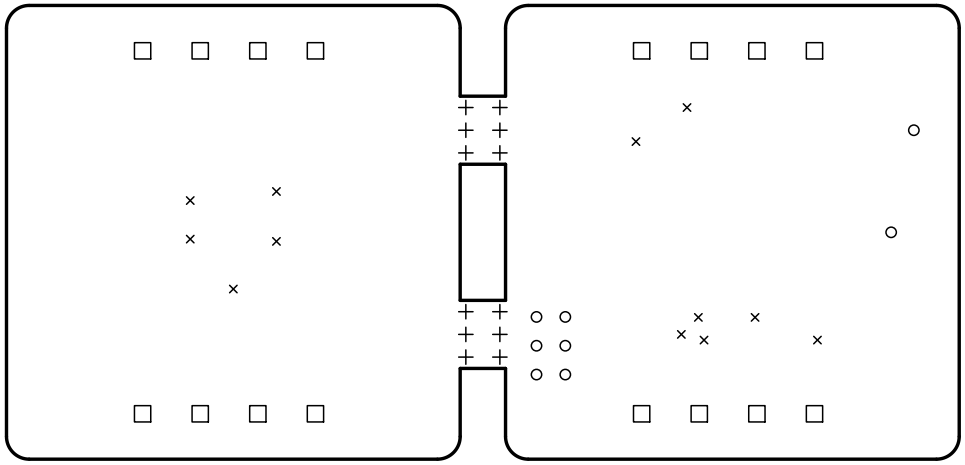

Drill Map:

× 0.33mm / 0.013" (12 holes)
○ 0.46mm / 0.018" (8 holes)
+ 0.64mm / 0.025" (12 holes)
□ 1.02mm / 0.040" (16 holes)

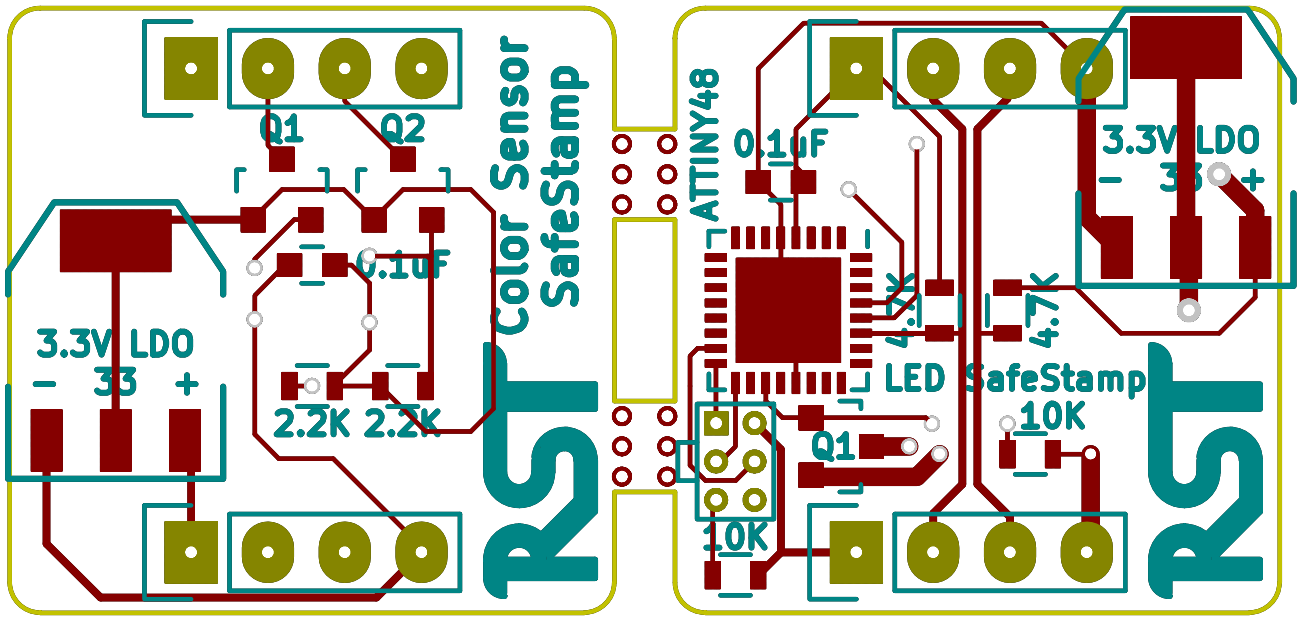
Color Sensor
SafeStamp
Q1
Q2
0.1uF
3.3V LDO
- 33 +
2.2K
2.2K
ATTINY48
0.1uF
4.7K
4.7K
LED SafeStamp
10K
Q1
10K
3.3V LDO
- 33 +

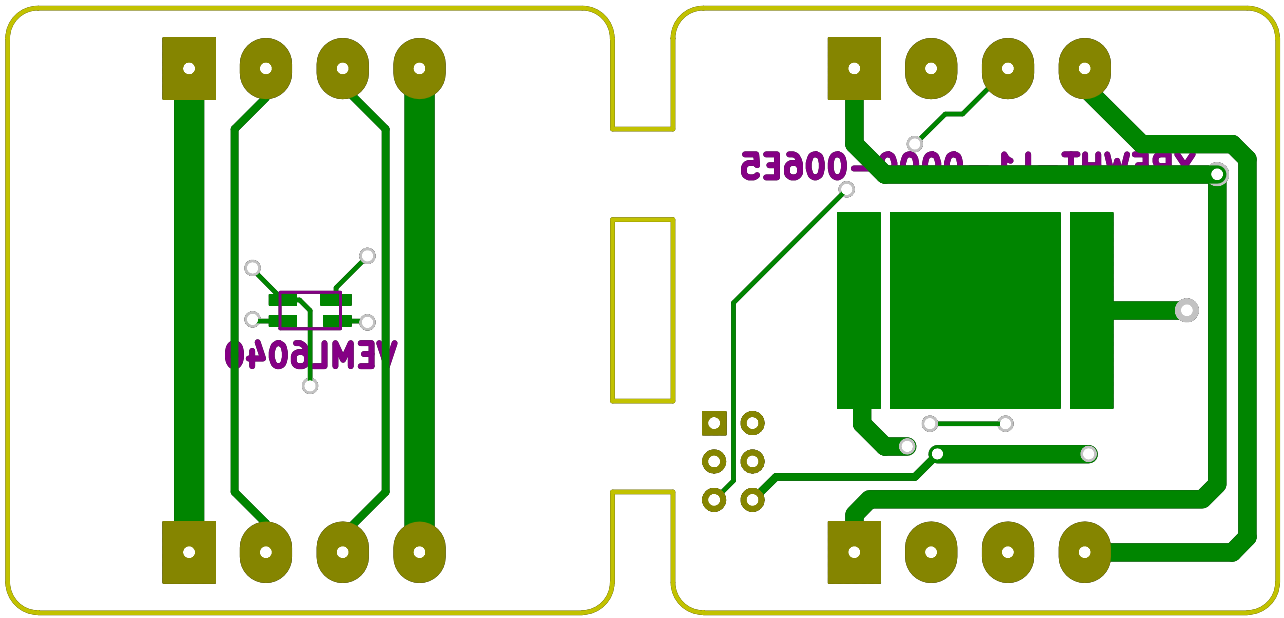

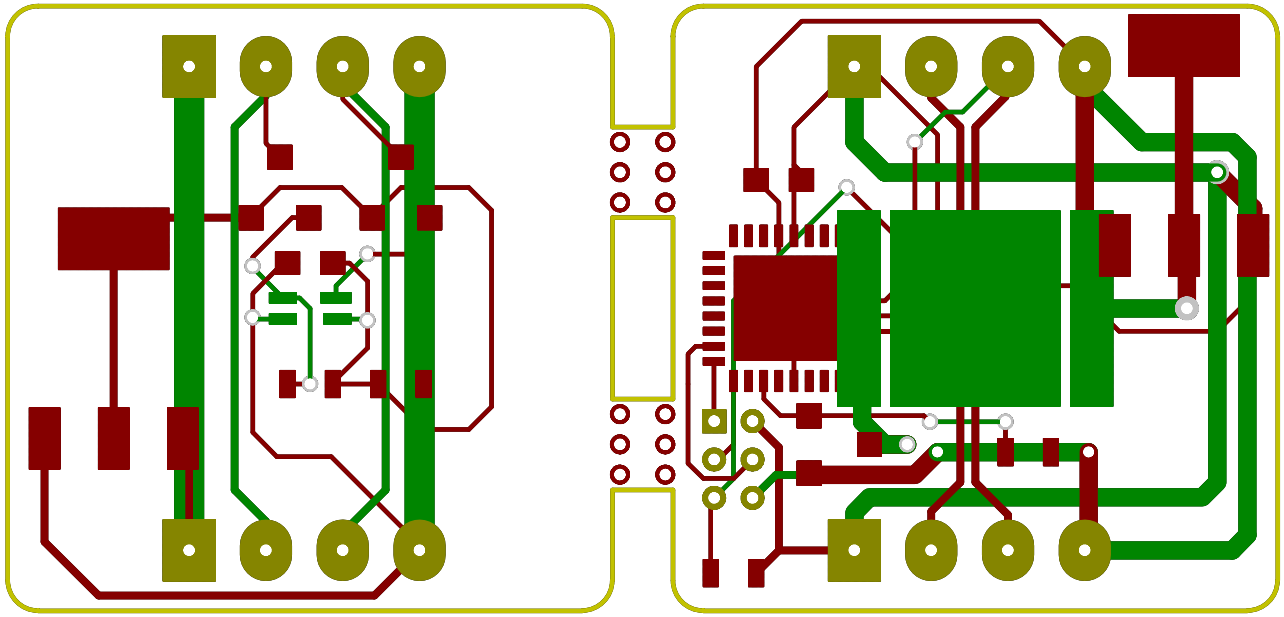

Designator	Digi-Key Part Number	Manufacturer	Manufacturer Part Numbe	Quantity 1	Mfg Std Lea	Description
U1,U3	AP2114H-3.3TRG1DICT-ND	DIODES INCORPORATED (VA)	AP2114H-3.3TRG1	2	5 Weeks	IC REG LDO 3.3V 1A SOT223
U2	VEML6040A3OGCT-ND	VISHAY SEMICONDUCTOR OPTO DIVI	VEML6040A3OG	1	6 Weeks	RGBW COLOR SENSOR I2C INTERFACE
Q1,Q2	568-5818-1-ND	NXP SEMICONDUCTORS (VA)	2N7002P,215	2	6 Weeks	MOSFET N-CH 60V 0.36A SOT-23
C1,C2	311-1335-1-ND	YAGEO (VA)	CC0603KPX7R7BB104	2	25 Weeks	CAP CER 0.1UF 16V X7R 0603
IC1	ATTINY48-MU-ND	ATMEL	ATTINY48-MU	1	6 Weeks	IC MCU 8BIT 4KB FLASH 32QFN
D1	XREWHT-L1-0000-006E5CT-ND	CREE INC (VA)	XREWHT-L1-0000-006E5	1	6 Weeks	LED XLAMP NEUTRAL WHT 4000K 2SMD
Q3	NTR4003NT1GOSCT-ND	ON SEMICONDUCTOR (VA)	NTR4003NT1G	1	10 Weeks	MOSFET N-CH 30V 500MA SOT-23
R3,R4	311-2.2KGRCT-ND	YAGEO (VA)	RC0603JR-072K2L	2	22 Weeks	RES SMD 2.2K OHM 5% 1/10W 0603
R1,R2	311-4.7KGRCT-ND	YAGEO (VA)	RC0603JR-074K7L	2	22 Weeks	RES SMD 4.7K OHM 5% 1/10W 0603
R5,R6	311-10KGRCT-ND	YAGEO (VA)	RC0603JR-0710KL	2	22 Weeks	RES SMD 10K OHM 5% 1/10W 0603
P1,P2,P3,P4	A1927-ND	TE CONNECTIVITY AMP	640457-4	4	10 Weeks	CONN HEADER RTANG 4POS .100 TIN
P6	S9015E-03-ND	SULLINS CONNECTOR SOLUTIONS	GRPB032VWVN-RC	1	4 Weeks	CONN HEADER .050" 6POS DL PCB AU

Digi-Key Part Number	Description	Quantity	Unit Price	Price
AP2114H-3.3TRG1DICT-ND	IC REG LDO 3.3V 1A SOT223	2	0.36	0.72
VEML6040A3OGCT-ND	RGBW COLOR SENSOR I2C INTERFACE	1	2.52	2.52
568-5818-1-ND	MOSFET N-CH 60V 0.36A SOT-23	2	0.14	0.28
311-1335-1-ND	CAP CER 0.1UF 16V X7R 0603	2	0.09	0.18
ATTINY48-MU-ND	IC MCU 8BIT 4KB FLASH 32QFN	1	1.1	1.1
XREWHT-L1-0000-006E5CT-ND	LED XLAMP NEUTRAL WHT 4000K 2SMD	1	5.62	5.62
NTR4003NT1GOSCT-ND	MOSFET N-CH 30V 500MA SOT-23	1	0.27	0.27
311-2.2KGRCT-ND	RES SMD 2.2K OHM 5% 1/10W 0603	2	0.1	0.2
311-4.7KGRCT-ND	RES SMD 4.7K OHM 5% 1/10W 0603	2	0.1	0.2
311-10KGRCT-ND	RES SMD 10K OHM 5% 1/10W 0603	2	0.1	0.2
A1927-ND	CONN HEADER RTANG 4POS .100 TIN	4	0.19	0.76
S9015E-03-ND	CONN HEADER .050" 6POS DL PCB AU	1	0.63	0.63
OSHPark	Colorimetry Ciruit Boards	0.33	6.55	2.18
Cost Per Board			**TOTAL:**	**14.86**

(Digi-Key) Part Number	Description	Quantity	Unit Price	Price
AP2114H-3.3TRG1DICT-ND	IC REG LDO 3.3V 1A SOT223	4	0.360	1.440
VEML6040A3OGCT-ND	RGBW COLOR SENSOR I2C INTERFACE	2	2.520	5.040
568-5818-1-ND	MOSFET N-CH 60V 0.36A SOT-23	4	0.140	0.560
311-1335-1-ND	CAP CER 0.1UF 16V X7R 0603	10	0.020	0.180
ATTINY48-MU-ND	IC MCU 8BIT 4KB FLASH 32QFN	2	1.100	2.200
XREWHT-L1-0000-006E5CT-ND	LED XLAMP NEUTRAL WHT 4000K 2SMD	2	5.620	11.240
NTR4003NT1GOSCT-ND	MOSFET N-CH 30V 500MA SOT-23	2	0.270	0.540
311-2.2KGRCT-ND	RES SMD 2.2K OHM 5% 1/10W 0603	10	0.011	0.110
311-4.7KGRCT-ND	RES SMD 4.7K OHM 5% 1/10W 0603	10	0.011	0.110
311-10KGRCT-ND	RES SMD 10K OHM 5% 1/10W 0603	10	0.011	0.110
A1927-ND	CONN HEADER RTANG 4POS .100 TIN	10	0.152	1.520
A122092-ND	CONN HEADR BRKWY 50POS VERT TIN	1	2.980	2.980
A105203-ND	CONN HEADER BRKWY R/A 50POS TIN	1	3.190	3.190
S9015E-03-ND	CONN HEADER .050" 6POS DL PCB AU	2	0.630	1.260
3M15520-ND	WIREMOUNT SOCKET .050" 6POS	1	4.100	4.100
DigiKey	USPS Priority Mail (Approx)	1	6.400	6.400
OSHPark	Colorimetry Ciruit Boards	1	6.550	6.550
OSH Stencils	Colorimetry Paste Stencils	1	9.110	9.110
OSH Stencils	USPS Standard Shipping	1	0.950	0.950
Total Cost	**Approximate due to DigiKey shipping**		**TOTAL:**	**57.59**