ESP32

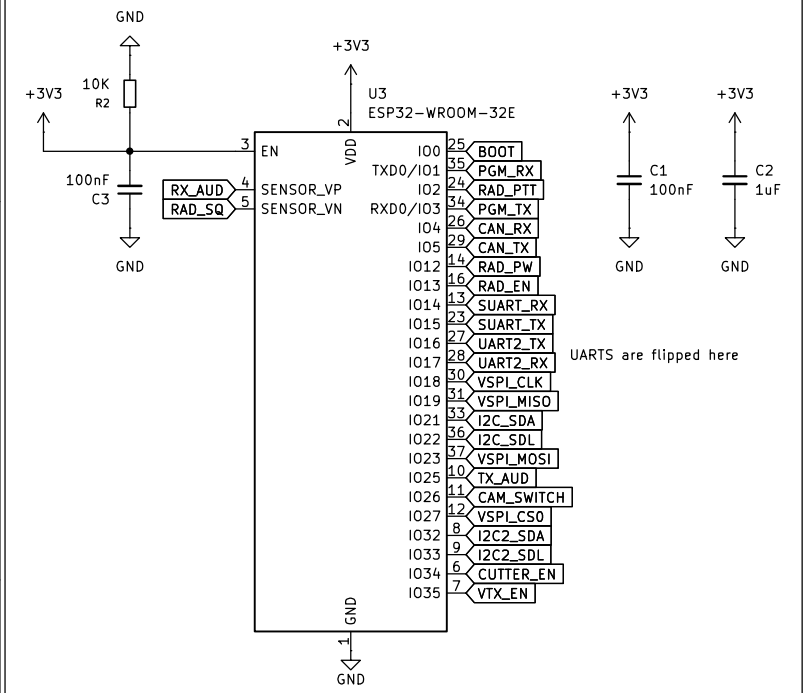

pulldown i2c

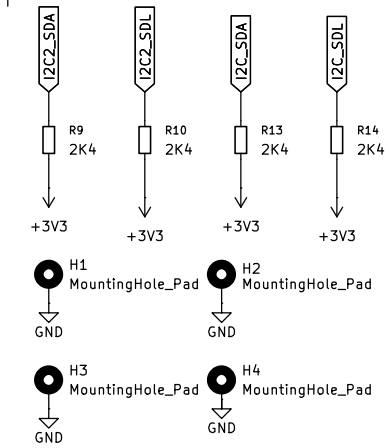

SENSORS

File: COMMS_BOARD_SENSORS.kicad_sch

Radio

File: COMMS_BOARD_RADIO.kicad_sch

CAN BUS

File: COMMS_BOARD_CAN_BUS.kicad_sch

FILTERING AND EMI MITIGATION

File: COMMS_BOARD_EMIFIL.kicad_sch

EXTERNAL CONNECTIONS

File: COMMS_BOARD_EXTERNAL_CONNS.kicad_sch

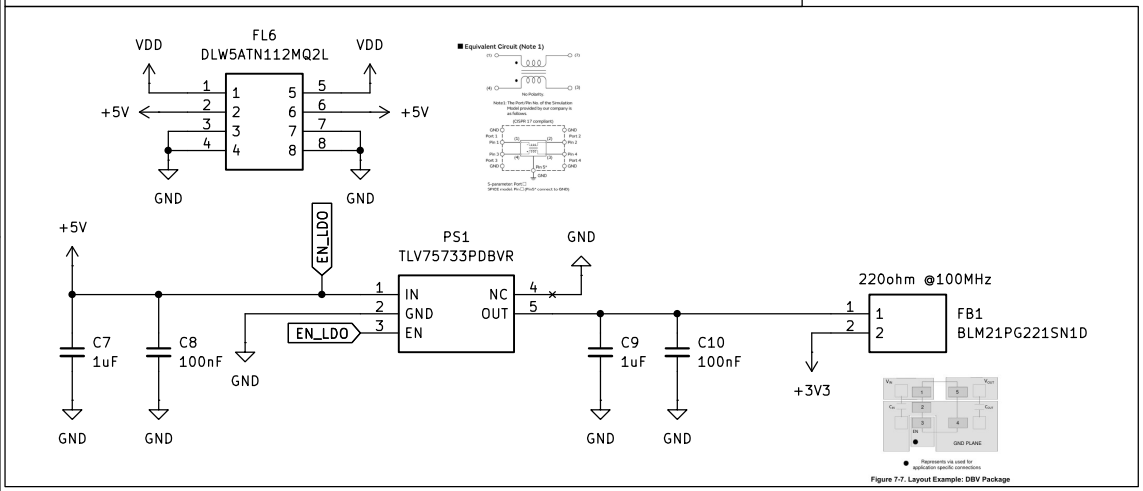

Sheet: /
File: COMMS_BOARD.kicad_sch

Title:

Size: A4	Date:	**Rev:**
KiCad E.D.A. 9.0.1		Id: 1/6

SA818S

Rad_EN is logic low enable to change to low power mode
Leave floating or open for high power mode
Rad_PW is logic low for power down and high for power up
Rad_PTT "0" force the module to enter TX state; and "1" to Rx state
*Before enter sleep mode, user need to pull low RXD Pin
to prevent current leakage or poor reset in the next time.

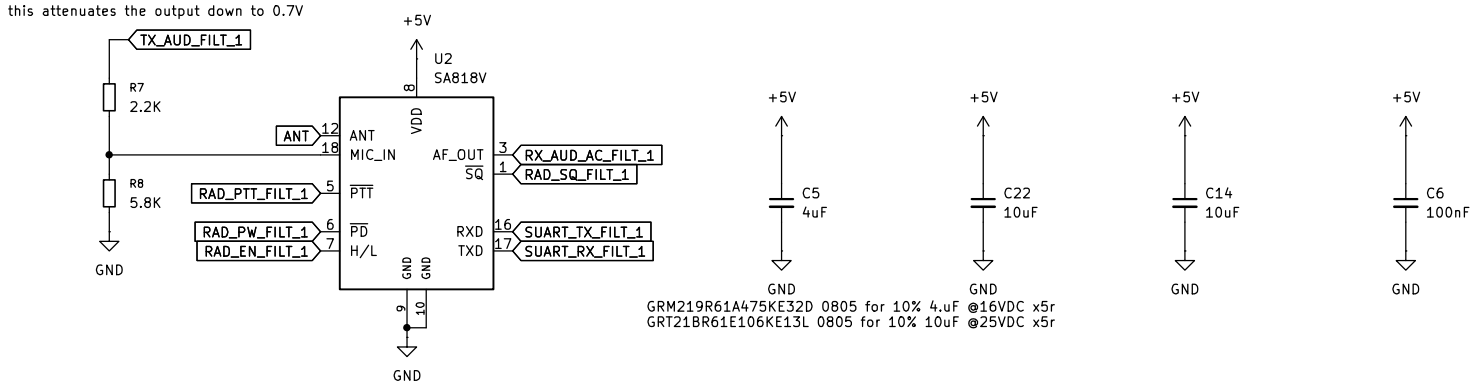

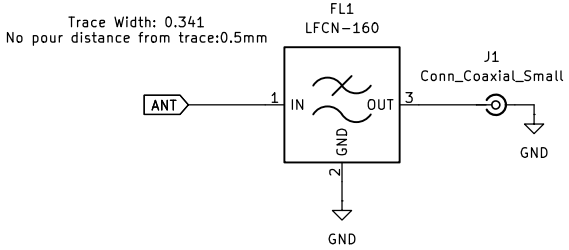

Rx audio bias+

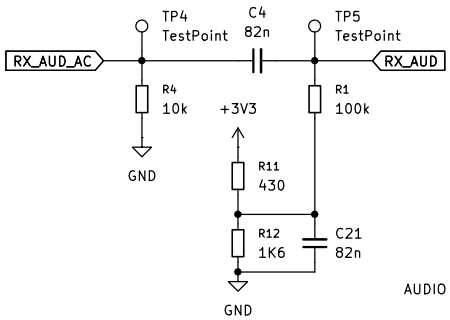

AUDIO OUTPUT IMPEDENCE: 200 OHM, OUTPUT AMPLITUTDE: 700mV

Sheet: /Radio/
File: COMMS_BOARD_RADIO.kicad_sch

Title:

Size: A4	Date:	Rev:
KiCad E.D.A. 9.0.1		Id: 2/6

NOTE: ONLY DATA LINES ARE FILTERED
Not required for GPIO lines like:
1.RAD_PTT
2.RAD_PW
3.RAD_SQ

Signal Line Ferrite Bead

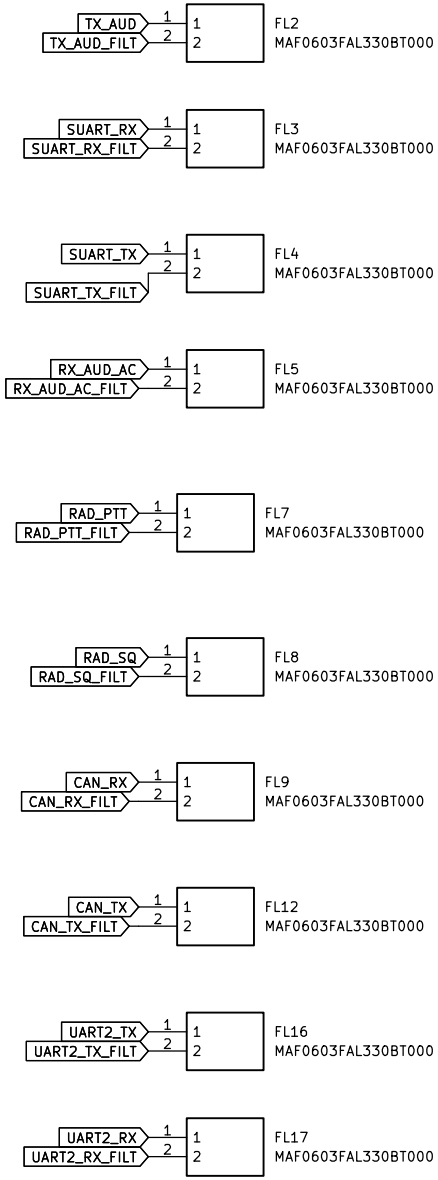

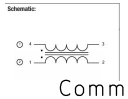

Common Mode Choke

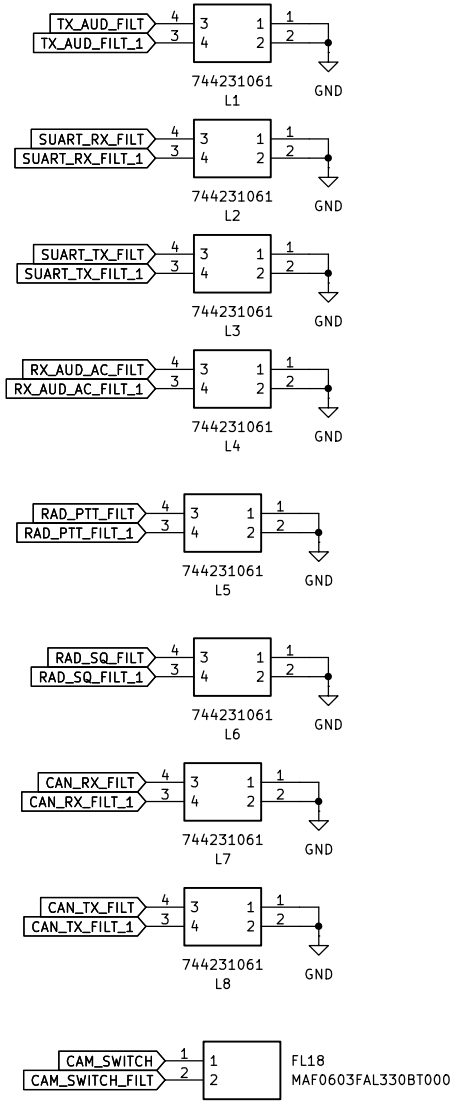

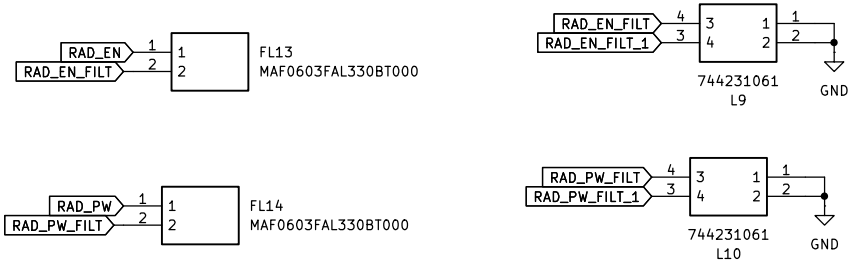

Sheet: /FILTERING AND EMI MITIGATION/
File: COMMS_BOARD_EMIFIL.kicad_sch

Title:

Size: A4	Date:	**Rev:**
KiCad E.D.A. 9.0.1		Id: 3/6

CAN TRANSCEIVER

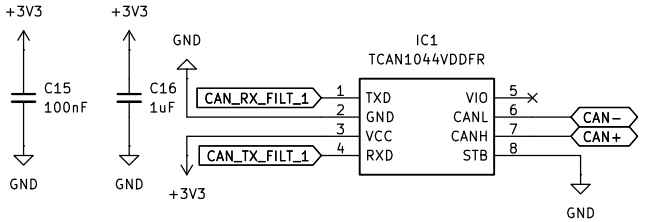

TO OPERATE IN NORMAL MODE, PULL STB TO GND

esd,emi filtering

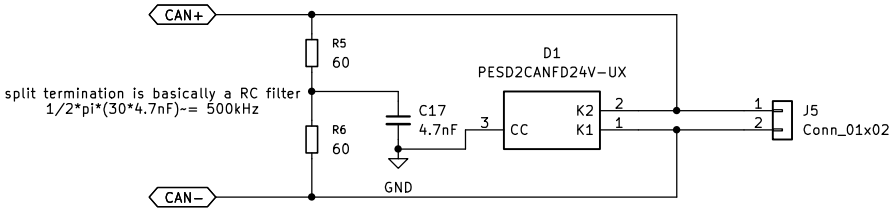

Sheet: /CAN BUS/
File: COMMS_BOARD_CAN_BUS.kicad_sch

Title:

Size: A4	Date:	**Rev:**
KiCad E.D.A. 9.0.1		Id: 4/6

BOOT MODE SWITCH

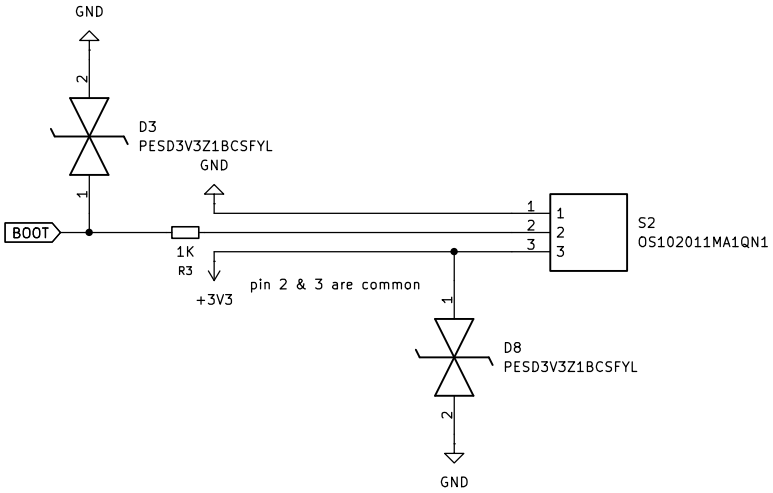

PROGRAMMING

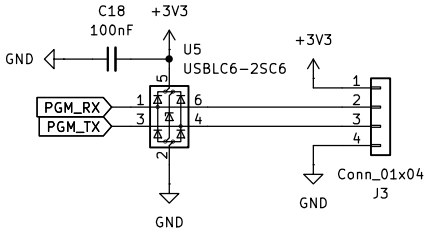

current sense+ power control

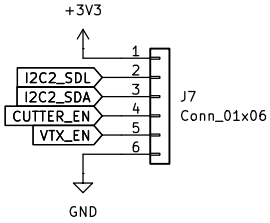

3V6 BUS POWER CONNECTOR

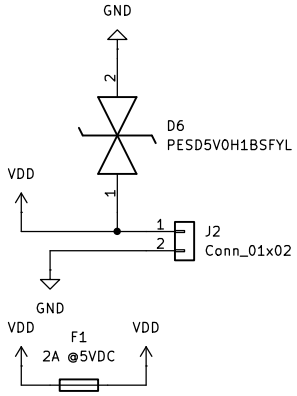

OSD+CAM SWITCHER

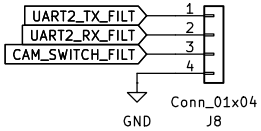

Sheet: /EXTERNAL CONNECTIONS/
File: COMMS_BOARD_EXTERNAL_CONNS.kicad_sch

Title:

Size: A4	Date:	**Rev:**
KiCad E.D.A. 9.0.1		Id: 5/6

Thermocouple

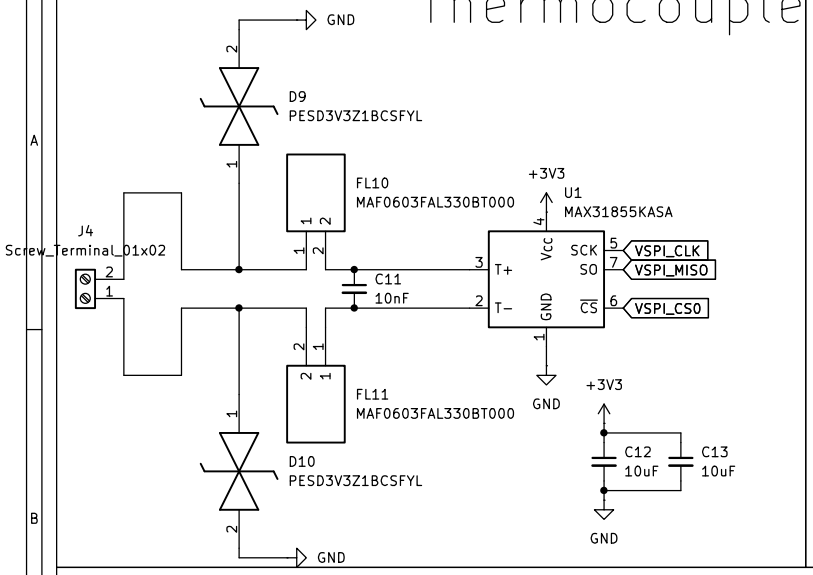

barometer

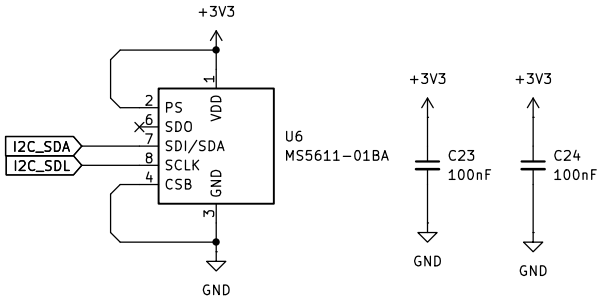

address: 0x77

GNSS

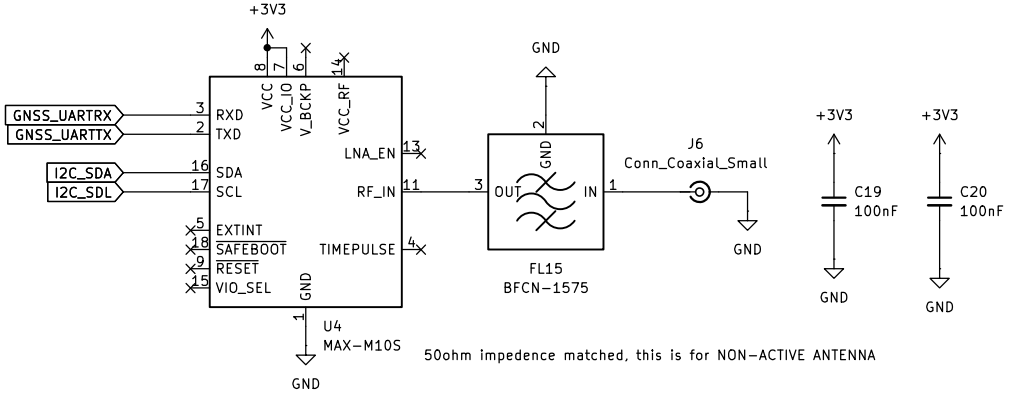

50ohm impedence matched, this is for NON-ACTIVE ANTENNA

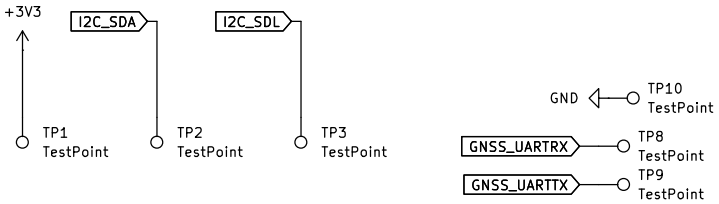

MARG

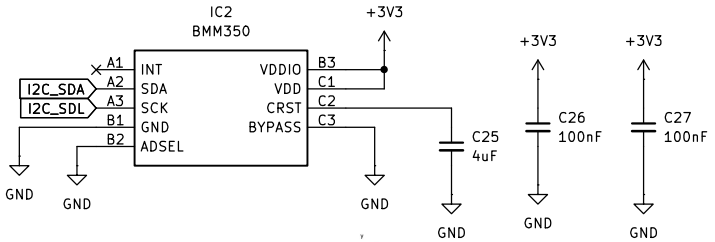

address: 0x14

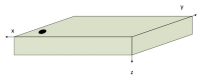

Figure 12: Coordinate system definition, right-handed. laser-marking side up

Sheet: /SENSORS/
File: COMMS_BOARD_SENSORS.kicad_sch

Title:

Size: A4	Date:	**Rev:**
KiCad E.D.A. 9.0.1		Id: 6/6