ESP32

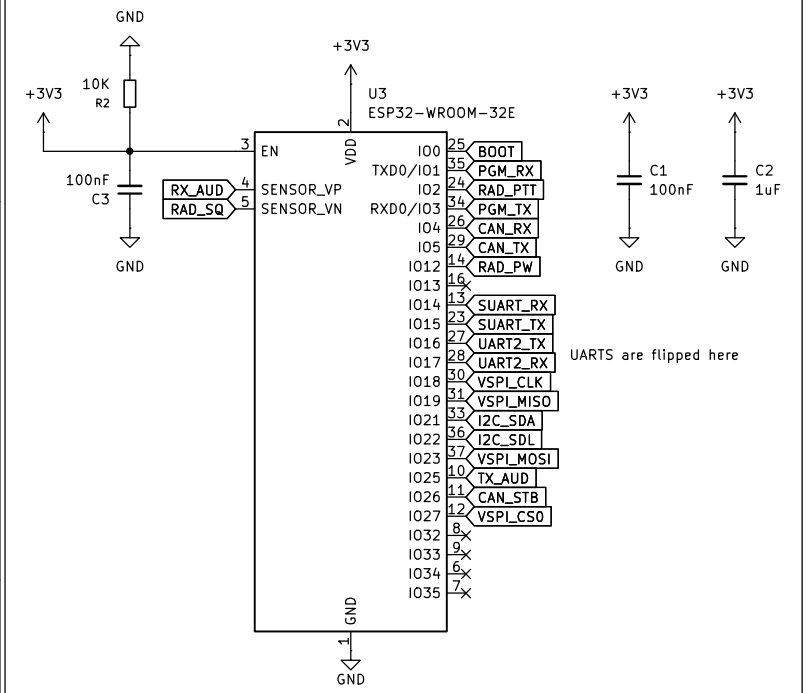

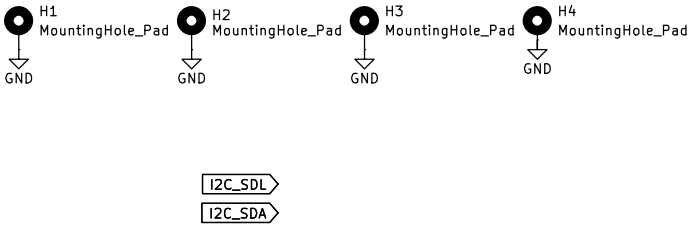

5V0 -> 3V0

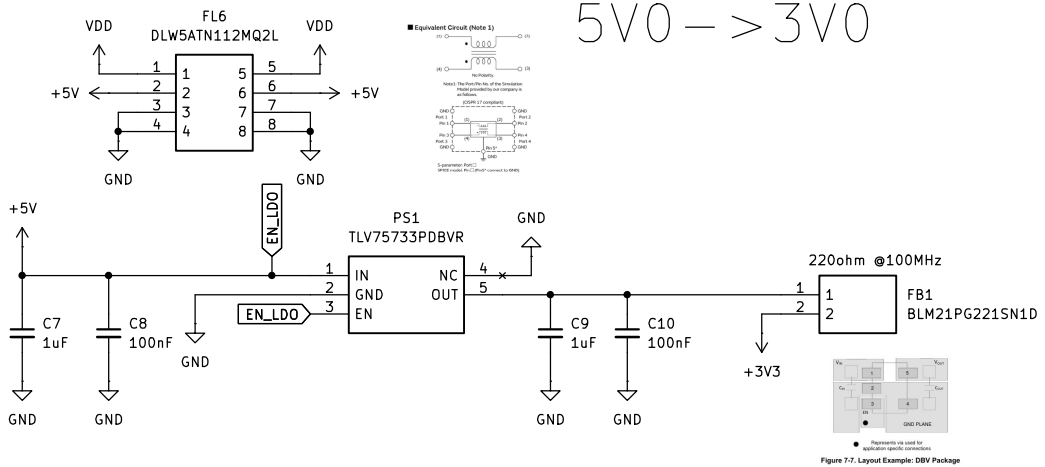

Radio

File: COMMS_BOARD_RADIO.kicad_sch

FILTERING AND EMI MITIGATION

File: COMMS_BOARD_EMIFIL.kicad_sch

CAN BUS

File: COMMS_BOARD_CAN_BUS.kicad_sch

EXTERNAL CONNECTIONS

File: COMMS_BOARD_EXTERNAL_CONNS.kicad_sch

SENSORS

File: COMMS_BOARD_SENSORS.kicad_sch

Sheet: /
File: COMMS_BOARD.kicad_sch

Title:

Size: A4	Date:	**Rev:**
KiCad E.D.A. 9.0.1		Id: 1/6

SA818S

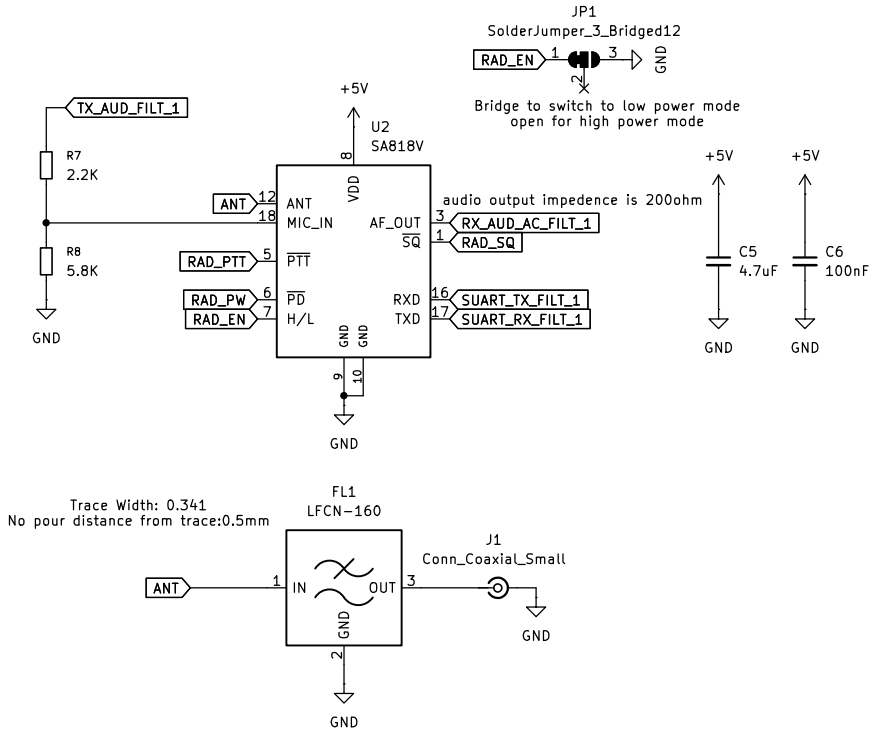

Rx audio

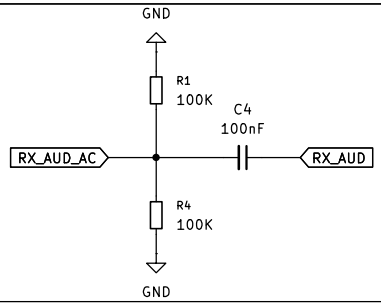

Sheet: /Radio/
File: COMMS_BOARD_RADIO.kicad_sch

Title:

Size: A4	Date:	**Rev:**
KiCad E.D.A. 9.0.1		Id: 2/6

NOTE: ONLY DATA LINES ARE FILTERED
Not required for GPIO lines like:
1.RAD_PTT
2.RAD_PW
3.RAD_SQ

Signal Line Ferrite Bead

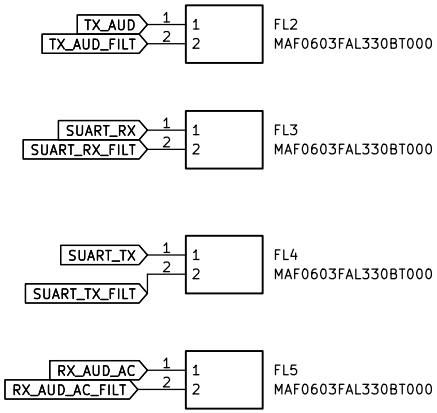

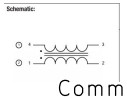

Common Mode Choke

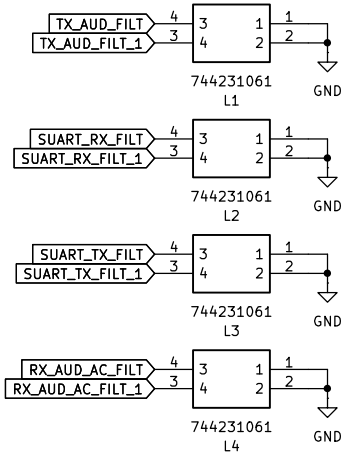

Sheet: /FILTERING AND EMI MITIGATION/
File: COMMS_BOARD_EMIFIL.kicad_sch

Title:

Size: A4	Date:	**Rev:**
KiCad E.D.A. 9.0.1		Id: 3/6

CAN TRANSCEIVER

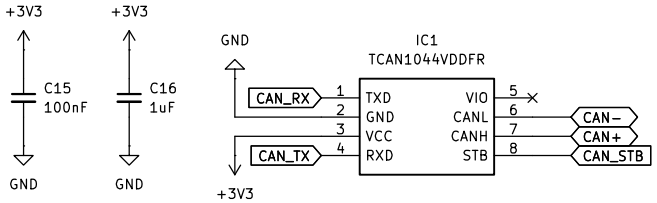

esd,emi filtering

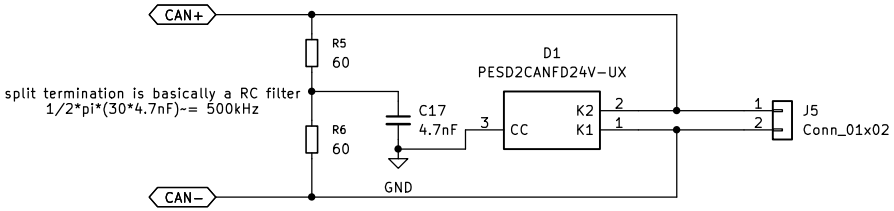

Sheet: /CAN BUS/
File: COMMS_BOARD_CAN_BUS.kicad_sch

Title:

Size: A4	Date:	**Rev:**
KiCad E.D.A. 9.0.1		Id: 4/6

BOOT MODE SWITCH

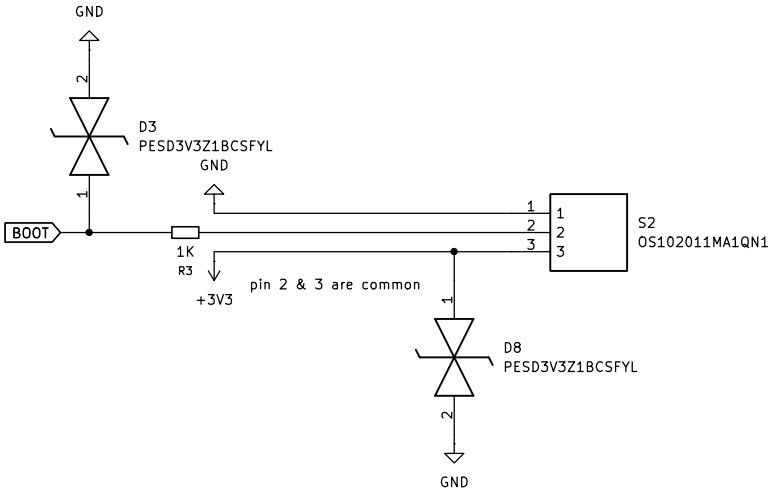

PROGRAMMING

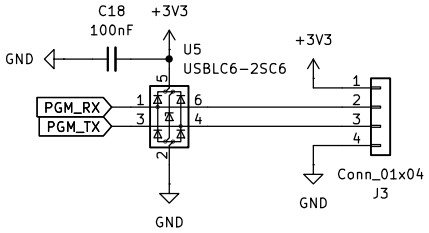

POWER CONNECTOR

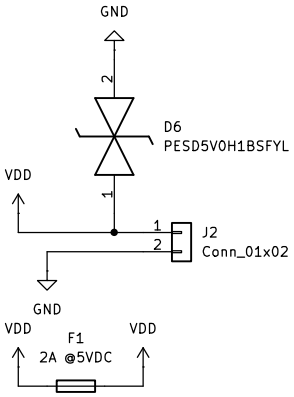

Sheet: /EXTERNAL CONNECTIONS/
File: COMMS_BOARD_EXTERNAL_CONNS.kicad_sch

Title:

Size: A4	Date:	**Rev:**
KiCad E.D.A. 9.0.1		Id: 5/6

Thermocouple

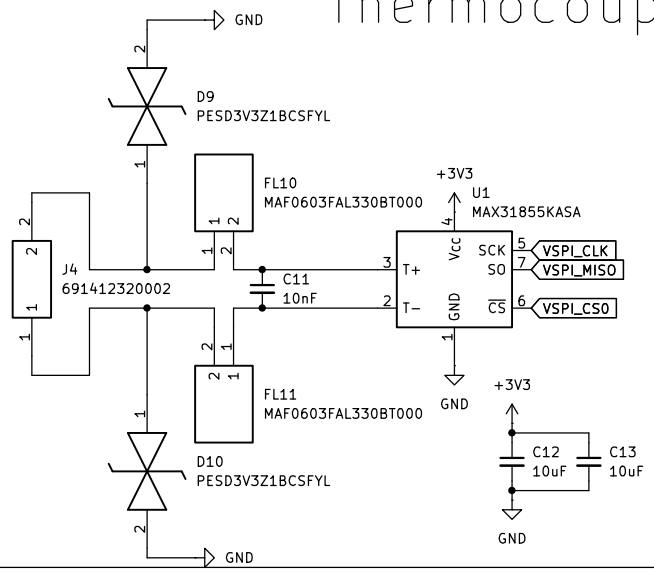

Sheet: /SENSORS/
File: COMMS_BOARD_SENSORS.kicad_sch

Title:

Size: A4	Date:	**Rev:**
KiCad E.D.A. 9.0.1		Id: 6/6