XAVIER UNIVERSITY – ATENEO DE CAGAYAN
COLLEGE OF COMPUTER STUDIES
DEPARTMENT OF INFORMATION TECHNOLOGY

STUDENT ORGANIZATION PROFILING SYSTEM (SOPS)

A Final Project Presented to:
Mr. William James Mabelin

In Partial Fulfillment of the Requirement for the Course
CSCC 21 C - SOFTWARE ENGINEERING 1

Submitted by:
Alo-ot, Karla Mae
Amarille, Christine Marie
Dimaporo, Nadjah
Nob, John Paul
Sedayon, Raphael

Submitted on:
December 19, 2025

Abstract

The Student Organization Profiling System (SOPS) is designed to address the increasing challenges faced by campus-based student organizations in maintaining accurate, secure, and easily accessible records. Many student organizations continue to rely on traditional manual methods such as spreadsheets, paper-based forms, and offline file storage to manage member information and organizational activities. While these methods are familiar and easy to use, they often lead to fragmented data, record duplication, increased risk of data loss, and inefficiencies in reporting and information retrieval.

To address these concerns, SOPS introduces a web-based, role-based organizational profiling platform that centralizes essential organizational data in a single, secure system. The platform manages membership profiles, activity documentation, attendance monitoring, and automated report generation. By integrating secure authentication, structured data management, and dashboard-based summaries, the system helps streamline administrative tasks and supports informed decision-making among student leaders and advisers.

The project is developed using Python as the core programming language, with PyQt6 used for the administrative interface and FastAPI serving as the backend service layer. Firebase is utilized for data storage and real-time synchronization. These technologies were selected to ensure system scalability, data integrity, and reliable performance across different platforms and user roles.

The significance of SOPS lies in its potential to modernize the operational workflows of student organizations by improving transparency, enhancing data accessibility, and reducing administrative workload. Through a centralized and secure system, SOPS provides reliable organizational information that supports compliance with university requirements and promotes more efficient and accountable student organization management.

Chapter 1: Introduction

Problem Statement

Student organizations often face significant challenges in managing member information, maintaining activity records, tracking attendance, and producing reports required for institutional compliance. Many organizations continue to rely on manual processes such as spreadsheets, paper-based forms, or loosely organized digital files. These methods increase the likelihood of inaccurate or incomplete data due to inconsistent updates, human error, and lack of standardized record-keeping.

Accessing important information during urgent situations is often difficult, as data may be scattered across multiple files or devices. This results in delays when submitting reports, validating attendance, or verifying member status. In addition, unmanaged digital files pose security risks, including unauthorized access, accidental deletion, and data leakage, especially when shared through unsecured platforms.

Manual monitoring of activities and attendance is also time-consuming and inefficient, requiring officers to repeatedly encode, verify, and consolidate information. Identifying active and inactive members becomes challenging without a centralized system, which may affect fair evaluation of participation and organizational performance. These issues emphasize the need for a secure, organized, and automated system that can centralize data, reduce errors, improve accessibility, and support student leaders and advisers in performing administrative tasks more effectively and responsibly.

Objectives

General Objective

To design and implement a secure, efficient, and user-friendly Student Organization Profiling System (SOPS) for managing organizational data.

Specific Objectives

1. To develop a centralized database for storing member profiles and organizational records.
2. To implement role-based access control for admins, officers, members, and advisers.
3. To design modules for attendance logging, activity monitoring, and event management.
4. To generate automated reports needed for university compliance.

5. To ensure security, reliability, and usability through appropriate software engineering practices.

Significance of the Study

This study benefits:

- **Student Organization Officers**
  Improves efficiency in managing profiles, events, and reports.

- **Members**
  Provides a seamless platform for updating information and viewing announcements.

- **Faculty Adviser**
  Ensures transparent and accurate access to organizational summaries.

- **University**
  Supports data consistency and enhances accountability among student groups.

Scope and Limitation

Scope

The system includes:

- Secure authentication and role assignment
- Member management (CRUD)
- Activity / event monitoring
- Attendance and participation tracking
- Dashboard summarization
- Report generation

Limitations

- Academic grades are not included
- No finance management beyond basic logs
- Features depend on internet connection
- External integrations (SMS, email automation) are not included

Chapter 2: Review of Related System

Challenges in Manual Student Record Management in Philippine Public Schools

Previous research in the Philippines has documented persistent challenges in the manual management of educational and organizational records. A study on student record management in public schools in the Bulacan region reported that teachers experience difficulties in entering, saving, and organizing student information. These issues often lead to inefficiencies, data inconsistency, and delays, highlighting the need for a structured information management system to improve accuracy and accessibility of records.

Limitations of Manual Club and Academic Organization Management Systems in Philippine Universities

Studies on club and academic organization management systems developed for Philippine universities show that many institutions still rely on manual or semi-manual processes for handling organizational data. Paper-based documentation and unstructured digital files often lead to operational inefficiencies, as officers spend significant time encoding, updating, and consolidating information. These practices also increase the likelihood of errors in membership records, activity documentation, and attendance tracking. As a result, generating accurate reports and monitoring organizational performance becomes difficult, especially during periods of high administrative demand.

Manual Organizational Profiling Practices in Universities

Manual organizational profiling forms remain commonly used in universities to record member information and organizational activities. In many cases, student organizations rely on online spreadsheets or shared documents as informal directories for storing member lists, attendance records, and activity logs. While convenient, these tools are often accessible to multiple users without proper access control, increasing the risk of unauthorized viewing, accidental modification, or data leakage of sensitive information.

Additionally, the use of separate files and manually updated records makes these systems prone to data loss, duplication, and outdated information. Inconsistent updates across multiple spreadsheets or documents can result in conflicting records, making it difficult to identify active or inactive members accurately. The absence of a centralized, secure, and role-based system further

limits the ability of student leaders and advisers to efficiently monitor participation, generate accurate reports, and ensure compliance with university requirements.

In response to these limitations, the Student Organization Profiling System (SOPS) improves upon existing practices by providing a tailored, centralized, role-based, and secure system designed specifically for university student organizations. By automating record management and consolidating organizational data into a single platform, SOPS addresses the shortcomings of manual systems and supports more efficient, accurate, and reliable organizational administration.

Chapter 3: Methodology

Software Process Model Used

The project uses the **Waterfall Model** for clear, phase-based development, enhanced with small iterative reviews at each stage. This ensures structured documentation while allowing flexibility during design and testing.

Phases:

1. Requirements Analysis
2. System Design
3. Implementation
4. Testing
5. Deployment
6. Maintenance/Documentation

System Requirements

I. Functional Requirements

- User authentication (login/logout)
- Role-Based Access Control (Admin, Officer, Member, Adviser)
- CRUD for member records and activities
- Attendance and event tracking
- Dashboard and system notifications
- Report generation

II. Non-Functional Requirements

- **Security:** Encrypted passwords, restricted roles
- **Performance:** Fast data retrieval and updates
- **Usability:** Intuitive interface for non-technical users
- **Reliability:** Consistent uptime and data accuracy
- **Scalability:** Can support multiple organizations
- **Portability:** Works on Windows, Linux, or Mac

System Design

I. Use-Case Diagram

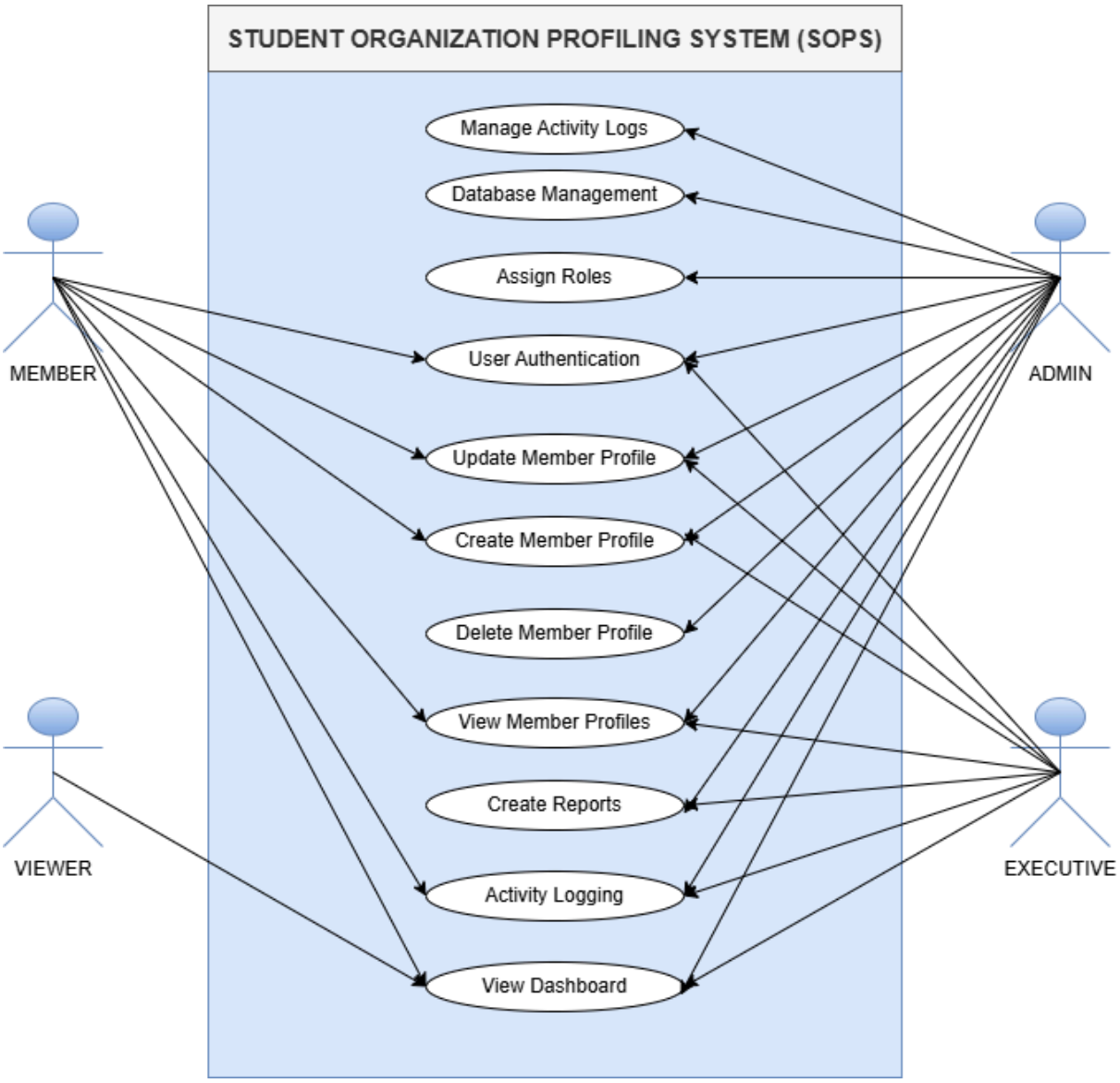

The Use Case Diagram presents the key interactions between users and the Student Organization Profiling System (SOPS). The system involves four primary actors: Admin, Executive, Member, and Viewer, each granted access to specific functionalities according to assigned roles and permissions.

The Admin actor has the highest level of access and is responsible for core system management tasks, including database management, role assignment, user authentication oversight, activity log management, member profile creation, updating and deletion, report generation, and dashboard monitoring. This role ensures data integrity, security, and overall system control.

The Executive actor supports organizational operations by accessing functionalities such as viewing member profiles, logging activities, generating

reports, and viewing dashboard summaries. Executives assist in managing day-to-day organizational tasks while operating within controlled system privileges.

The Member actor primarily interacts with the system through user authentication, updating personal member profiles, logging activities, viewing dashboards, and accessing permitted member-related information. This role focuses on participation and personal data management rather than administrative control.

The Viewer actor has limited access, restricted mainly to viewing dashboards and selected organizational information without modification privileges. This role supports transparency while maintaining data security.

Overall, the diagram demonstrates the role-based access control implemented in SOPS, ensuring that system functionalities are accessible only to authorized users. The use case model clearly defines system boundaries, user responsibilities, and functional scope, serving as a foundation for system design and development.

II. Class Diagram

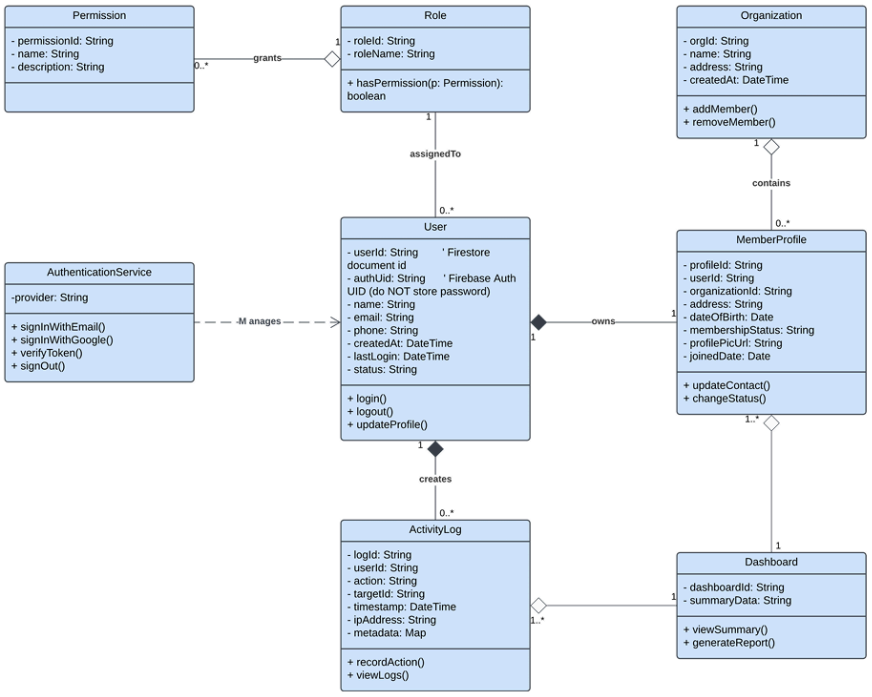

This diagram provides a detailed look at the object-oriented structure of the software. Core classes include User, Organization, MemberProfile, ActivityLog, Permission, and Role, each encapsulating relevant attributes and methods. The User class manages authentication and identity, containing fields like username, email, password hash, and assigned role. The Role class associates with Permission, demonstrating how user access levels are enforced throughout the system. The Organization class stores organizational metadata, while MemberProfile manages individual student details, positions, and their involvement in activities. The

ActivityLog class tracks user or member interactions, including login times, attendance logs, and other recorded actions. Associations among these classes represent how a user may belong to an organization, hold roles and permissions, and interact with the system's activity features. This diagram reflects the system's modular back-end design and supports maintainability, scalability, and clear separation of responsibilities.

III. Sequence Diagram

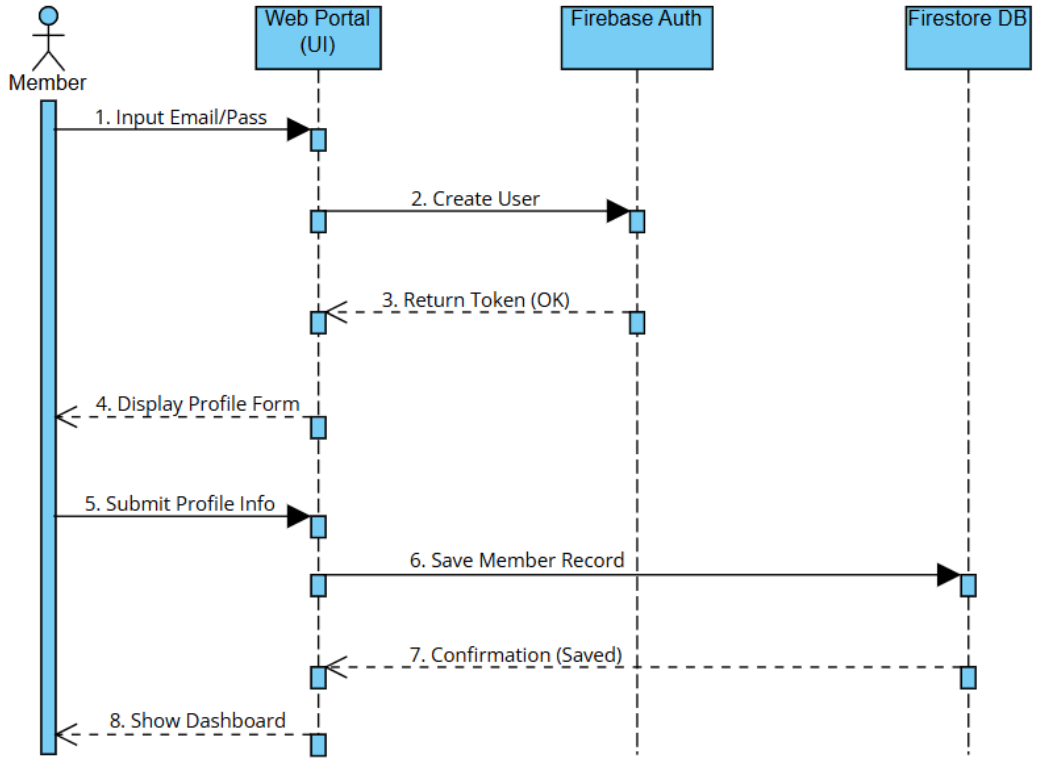

The sequence diagram illustrates the process of user registration and profile creation in the Student Organization Profiling System (SOPS). The interaction begins when a Member enters their email and password through the Web Portal (UI). The web interface then sends the authentication request to Firebase Authentication, which creates the user account and returns a verification token upon successful registration.

After receiving the authentication token, the system displays the member profile form on the web interface. The Member proceeds to submit the required profile information, which is then processed by the system. The Web Portal sends the completed profile data to the Firestore Database, where the member record is stored securely.

Once the data is successfully saved, the database sends a confirmation response back to the Web Portal. The system then displays the dashboard to the Member, indicating that the registration and profile setup process has been

completed successfully. This sequence demonstrates how SOPS integrates user authentication and data storage to ensure a secure and structured onboarding process for organization members.

IV. Entity Relationship Diagram

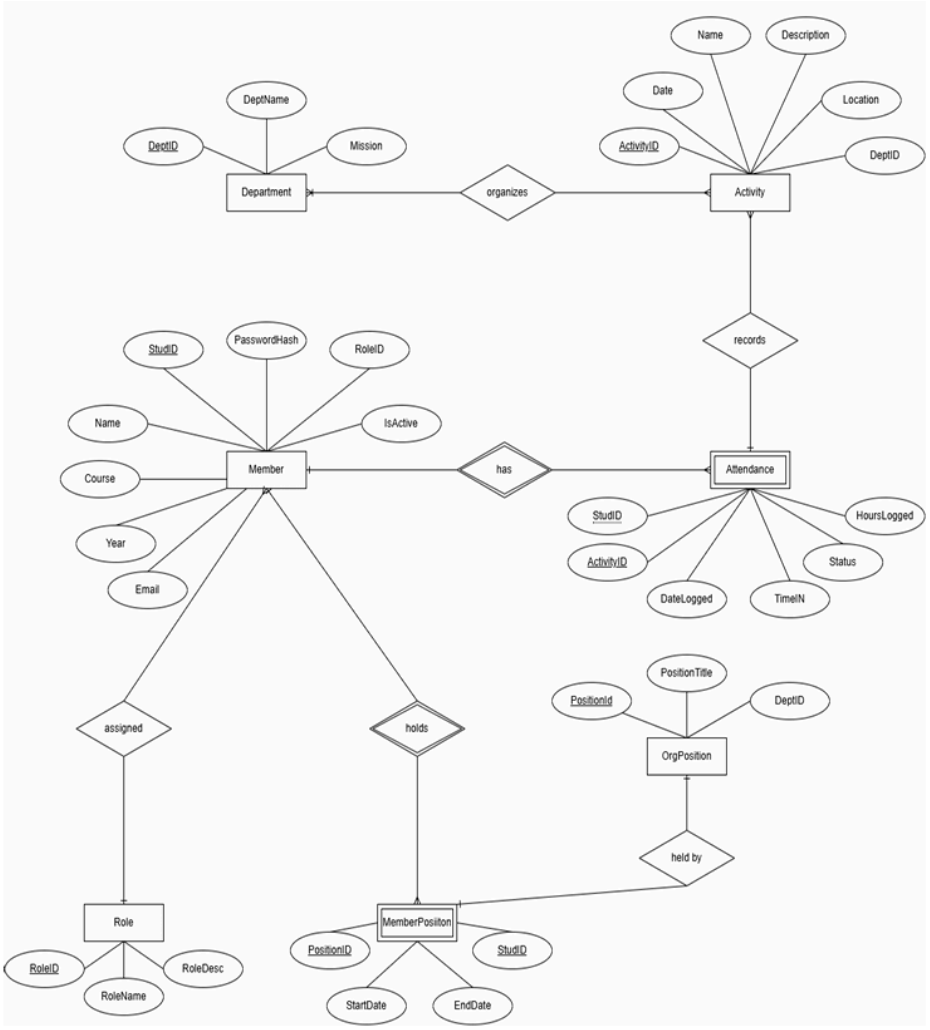

The Entity–Relationship Diagram illustrates the overall data structure of the Student Organization Profiling System (SOPS), showing how major entities interact within the system. The central entity is the Member, which stores key student information such as name, ID, course, year, email, and login credentials. Members may hold specific organizational roles, represented by the Role entity, which defines the responsibilities assigned to each user. Members can also have designated Positions within their organizations through the MemberPosition relationship. The Organization or department entity structures groups of members and provides attributes such as department name, mission, and department ID. The Activity entity represents events or organizational initiatives planned within the system, each containing details such as activity name, description, date, and location. The Attendance entity connects members and activities, recording participation information such as status, hours logged, and timestamps. Overall, the ERD shows a

structured relational model that ensures organized data storage, clear relationships, and efficient handling of organizational, member, and activity records.

Tools and Technologies Used

Backend: Firebase Authentication and Firestore Database
Frontend: HTML, Tailwind CSS, Lucide React, and JavaScript
Version Control: GitHub
Other Tools: Figma (UI Design), Draw.io (Diagrams), and Visual Studio Code

Chapter 4: Implementation & Testing

Gantt Chart (Planned vs Actual)

Planned

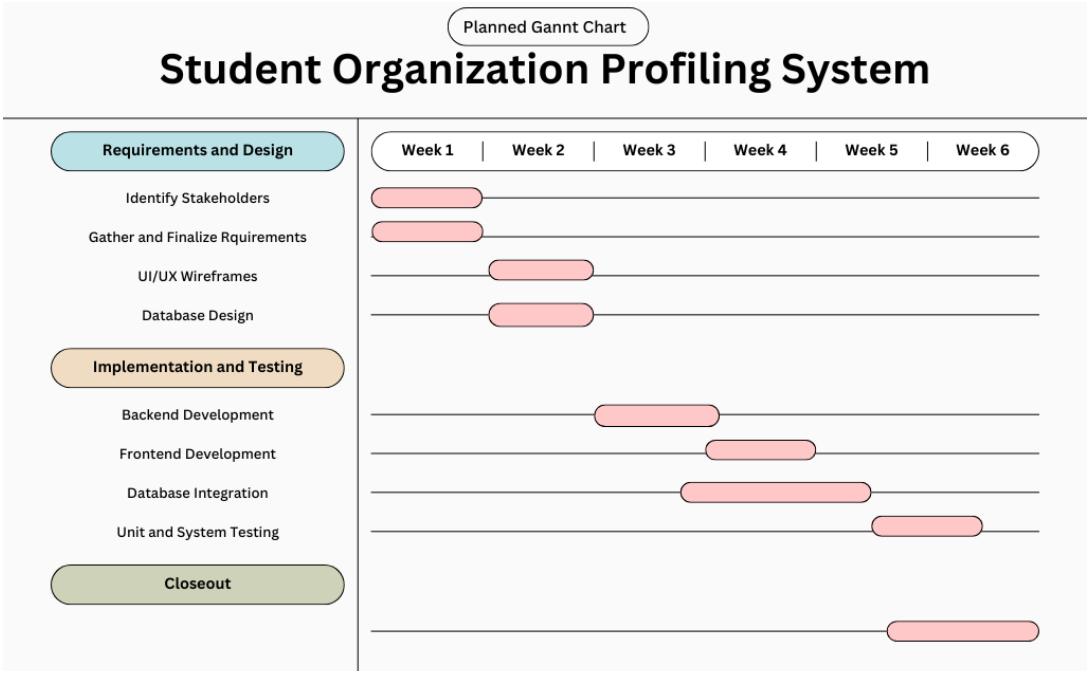

Actual

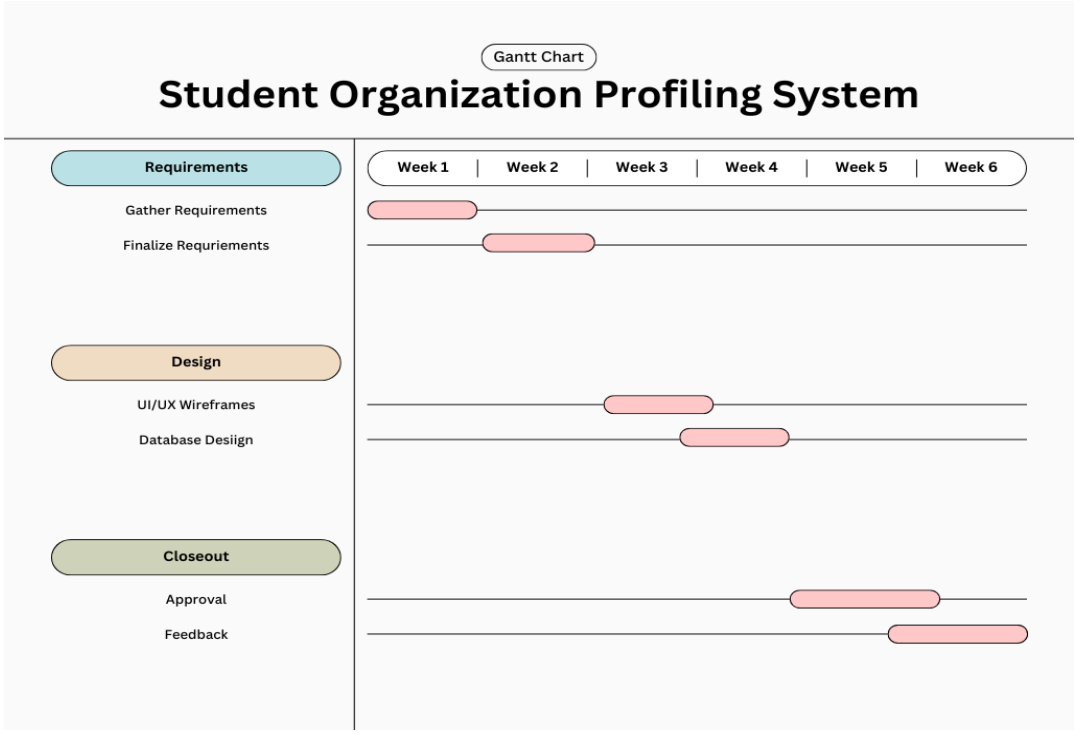

Component Diagram

Includes components:

- Authentication Module
- Member Management Module
- Event & Attendance Module
- Reporting Module
- Database

Test Plan

I. Test Objectives

The primary objective of testing the Student Organization Profiling System (SOPS) is to ensure that all system functionalities operate correctly, securely, and efficiently according to the defined requirements. Testing aims to verify that the system meets its functional and non-functional requirements, supports role-based access, maintains data integrity, and provides a user-friendly experience for all users including administrators, officers, members, and advisers.

II. Test Scope

The testing process covers the following system components and features:

- User authentication and login/logout functionality
- Role-based access control (Admin, Officer, Member, Adviser)
- Member profile management (Create, Read, Update, Delete)
- Activity and event management
- Attendance tracking and logging
- Dashboard data display and summaries
- Report generation and data retrieval

Both functional testing and basic non-functional testing such as usability, security, and performance are included within the scope.

III. Test Types

The following testing methods were applied during system development:

- Unit Testing – Individual modules such as authentication, member management, and attendance logging were tested independently to ensure correct behavior.
- Integration Testing – Interactions between frontend components, backend services, and the Firebase database were tested to confirm proper data flow.

- System Testing – The complete system was tested as a whole to verify that all features work together as intended.

IV. Test Environment

Testing was performed in a standard development setup using commonly available tools. The system was accessed through modern web browsers such as Google Chrome and Microsoft Edge. Firebase Authentication and Firestore Database were used to handle user accounts and data storage. All testing activities were conducted using Visual Studio Code in an environment with a stable internet connection.

V. Test Criteria

Testing began once the main system modules were completed and properly integrated. Test data and user roles were prepared in advance to simulate actual usage. The testing phase was considered complete when all important features worked as expected, major issues were resolved, and the system demonstrated consistency with the requirements defined in earlier chapters.

VI. Test Results Summary

Overall, the testing results showed that the Student Organization Profiling System functions reliably and meets its intended objectives. Core features performed as expected, and the system successfully enforced access control and secure data handling. Minor usability issues were identified during testing and improved before final submission. Based on these results, the system is considered ready for use in managing student organization records and activities.

About the Developers

- Christine Marie B. Amarille – Documentation Lead

  Responsible for preparing, organizing, and refining all written project components, including system descriptions, diagrams, and technical documentation. Ensured clarity, consistency, and alignment of the documentation with the system's design and implementation.

- Raphael Sedayon – Backend Developer

  Handled server-side development and database integration, including the development of the system's backend service layer responsible for authentication, business logic, and database operations. Ensured secure data handling and reliable system performance.

- John Paul Nob – Backend and Frontend Developer

  Contributed to both backend logic and frontend interface development. Responsible for implementing core system functionalities, integrating frontend components with the backend service layer, and ensuring smooth and secure communication between the client and server. Assisted in debugging, feature integration, and overall system stability.

- Karla Mae Alo-ot – Frontend Developer

  Focused on designing and implementing the user interface and client-side functionalities. Ensured that the system is user-friendly, visually consistent, and responsive to user interactions. Worked closely with the backend developers to integrate frontend components with system data and functionalities.

- Nadjah Dimaporo – Tester

  Conducted systematic system testing to evaluate functionality, usability, and reliability. Identified bugs, verified system behavior against requirements, and validated that the system meets project objectives and complies with specified functional and non-functional requirements.

References

Marzan, R., Olarte, L., Pugeda, R. D., & Gumabay, M. V. N. (2025). *Club and academic organization management system with decision support*. The Light Explorer, *10*(2). https://doi.org/10.57180/rgcr4783

Riño, J. L., & Daing, C. A. (2022). Challenges in Handling Student Records and Characteristics of Student Information Management System in Public Secondary School in Marilao South District IV Bulacan. *Psychology and Education: A Multidisciplinary Journal*, *4*(1), 105-120.