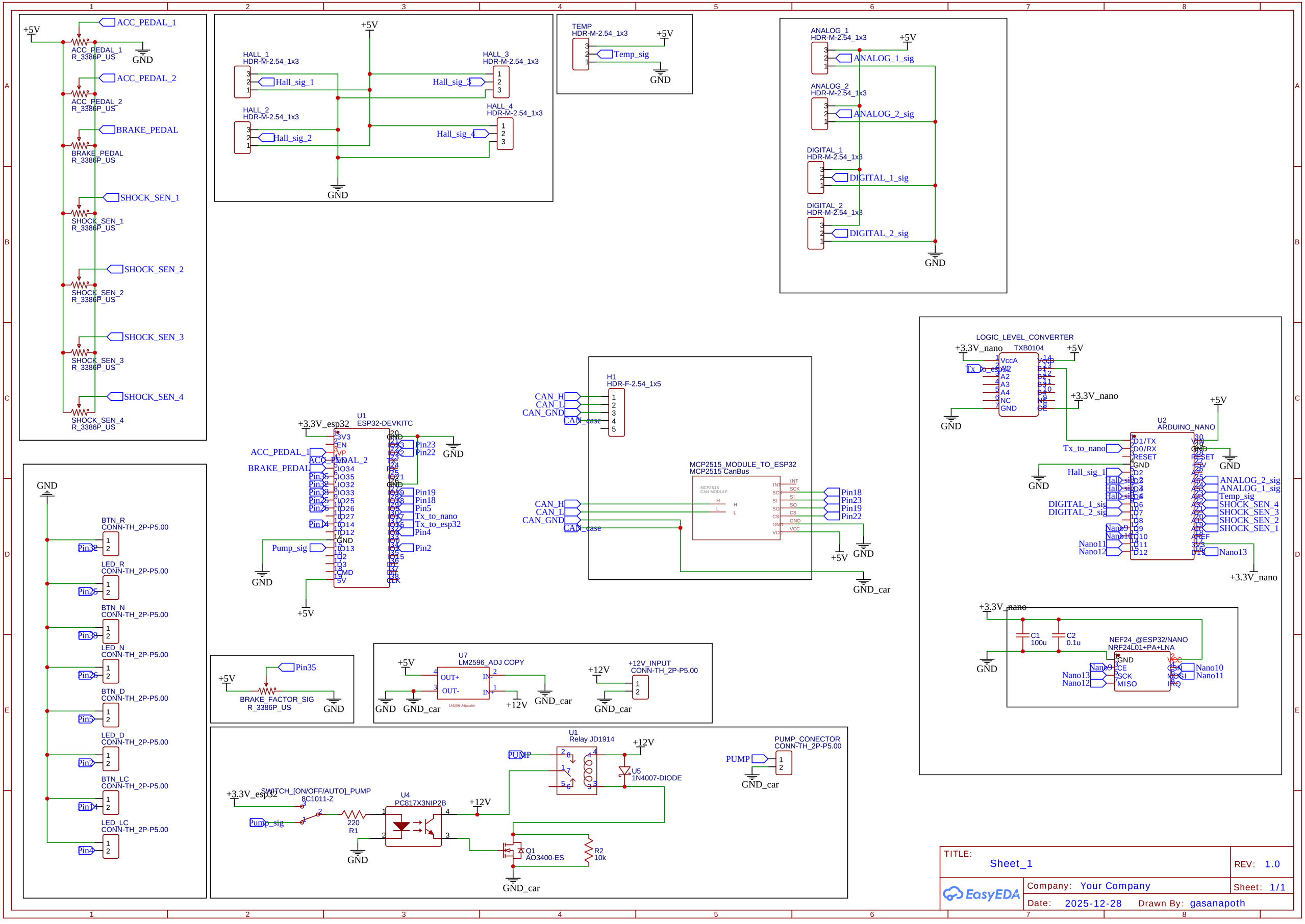
ACC_PEDAL_1
ACC_PEDAL_1 R_3386P_US
ACC_PEDAL_2
ACC_PEDAL_2 R_3386P_US
BRAKE_PEDAL
BRAKE_PEDAL R_3386P_US
SHOCK_SEN_1
SHOCK_SEN_1 R_3386P_US
SHOCK_SEN_2
SHOCK_SEN_2 R_3386P_US
SHOCK_SEN_3
SHOCK_SEN_3 R_3386P_US
SHOCK_SEN_4
SHOCK_SEN_4 R_3386P_US
HALL_1 HDR-M-2.54_1x3
HALL_2 HDR-M-2.54_1x3
HALL_3 HDR-M-2.54_1x3
HALL_4 HDR-M-2.54_1x3
Hall_sig_1
Hall_sig_2
Hall_sig_3
Hall_sig_4
TEMP HDR-M-2.54_1x3
Temp_sig
ANALOG_1 HDR-M-2.54_1x3
ANALOG_2 HDR-M-2.54_1x3
ANALOG_1_sig
ANALOG_2_sig
DIGITAL_1 HDR-M-2.54_1x3
DIGITAL_2 HDR-M-2.54_1x3
DIGITAL_1_sig
DIGITAL_2_sig
BTN_R CONN-TH_2P-P5.00
LED_R CONN-TH_2P-P5.00
BTN_N CONN-TH_2P-P5.00
LED_N CONN-TH_2P-P5.00
BTN_D CONN-TH_2P-P5.00
LED_D CONN-TH_2P-P5.00
BTN_LC CONN-TH_2P-P5.00
LED_LC CONN-TH_2P-P5.00
U1 ESP32-DEVKITC
+3.3V_esp32
Pump_sig
Tx_to_nano
Tx_to_esp32
H1 HDR-F-2.54_1x5
CAN_H
CAN_L
CAN_GND
CAN_case
MCP2515_MODULE_TO_ESP32
MCP2515 CanBus
LOGIC_LEVEL_CONVERTER
TXB0104
+3.3V_nano
U2 ARDUINO_NANO
Hall_sig_1
DIGITAL_1_sig
DIGITAL_2_sig
NEF24_@ESP32/NANO
NRF24L01+PA+LNA
C1 100u
C2 0.1u
BRAKE_FACTOR_SIG R_3386P_US
U7 LM2596_ADJ COPY
+12V_INPUT CONN-TH_2P-P5.00
U1 Relay JD1914
U5 1N4007-DIODE
PUMP_CONECTOR CONN-TH_2P-P5.00
SWITCH_[ON/OFF/AUTO]_PUMP 8C1011-Z
U4 PC817X3NIP2B
220 R1
Q1 AO3400-ES
R2 10k
GND
GND_car
+5V
+12V
TITLE: Sheet_1
REV: 1.0
Company: Your Company
Sheet: 1/1
Date: 2025-12-28
Drawn By: gasanapoth
EasyEDA

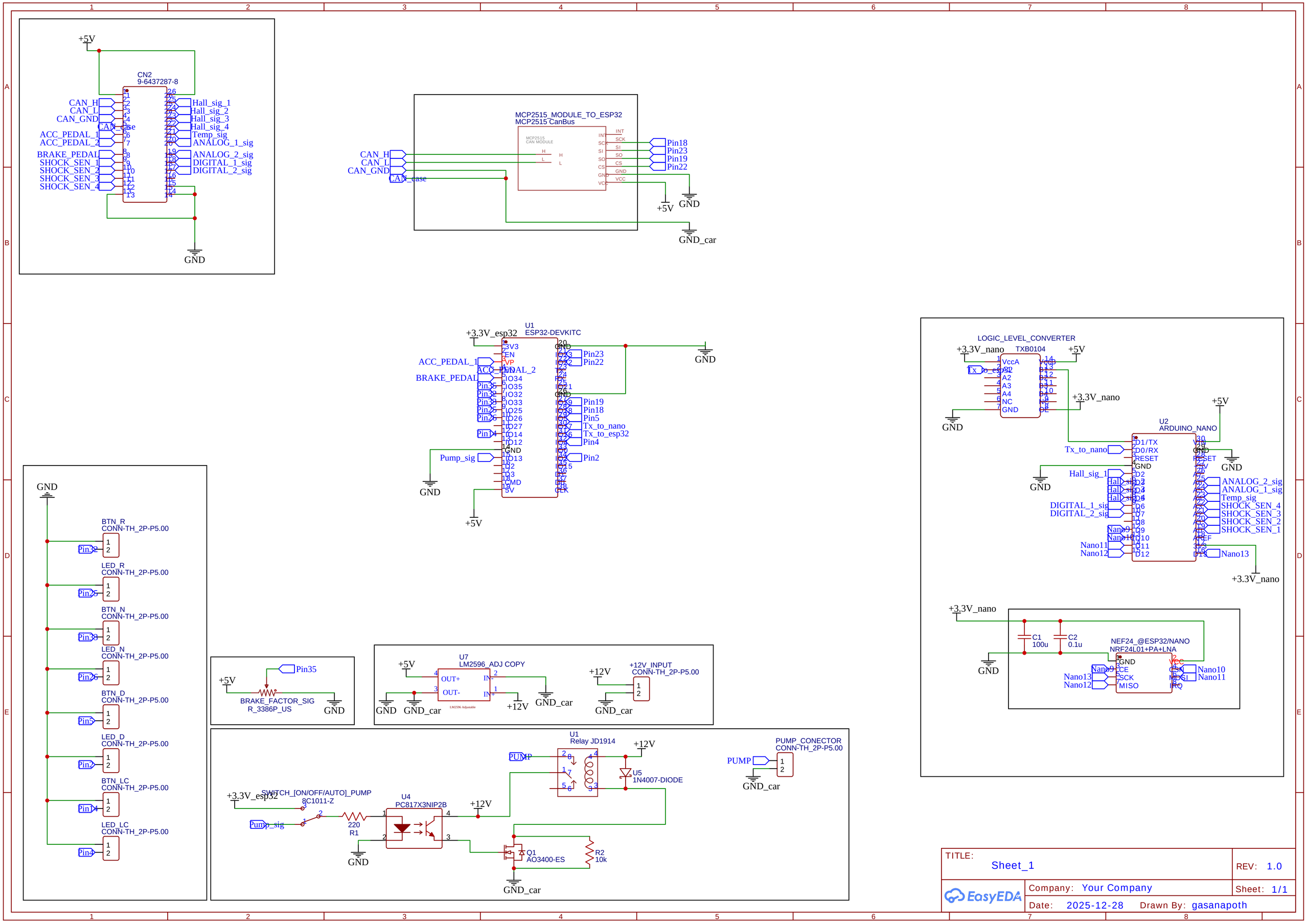

TITLE: Sheet_1	REV: 1.0
Company: Your Company	Sheet: 1/1
Date: 2025-12-28	Drawn By: gasanapoth