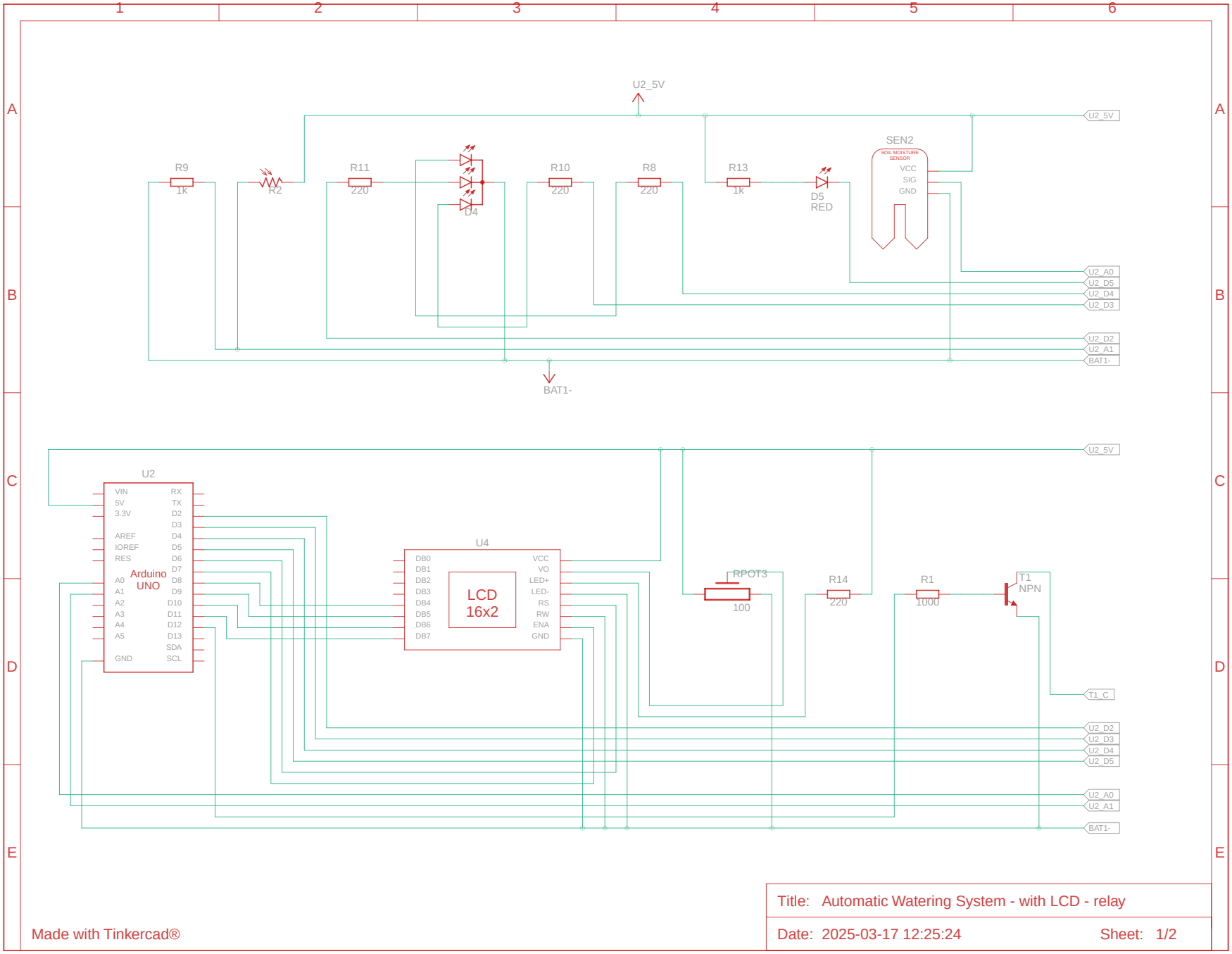

Made with Tinkercad®

Title: Automatic Watering System - with LCD - relay

Date: 2025-03-17 12:25:24

Sheet: 1/2

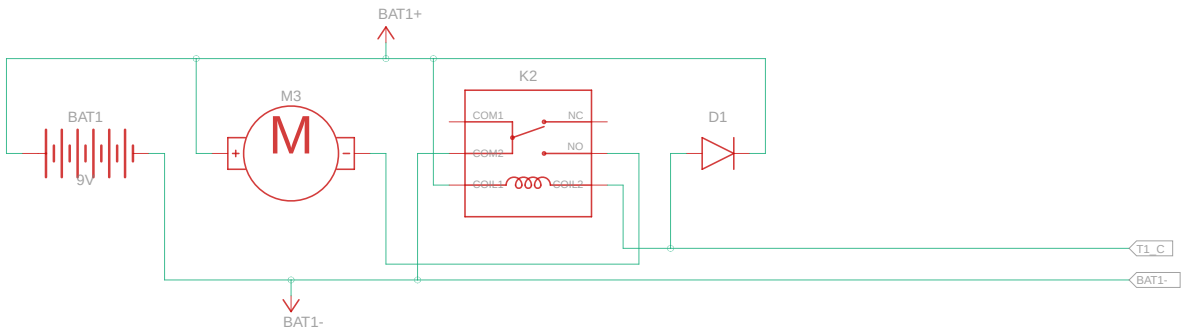

Made with Tinkercad®

Title: Automatic Watering System - with LCD - relay

Date: 2025-03-17 12:25:24

Sheet: 2/2