Shahjalal University of Science and Technology

Department of Electrical and Electronic Engineering

B.Sc. (Engg.) First Year, First Semester Final Examination-2022

Course Code: EEE 07131121 **Session:** 2020-2021

Course Title: Basic Electrical and Electronic Circuit

Total Marks: 60 **Credits: 3.0** **Total Time: 3 Hours**

[The figure in the right margin indicates full marks]

Part-A

*[Answer **all** the questions.]*

1. (a) What are luminescent and photo-luminescent processes? 2

   (b) How is the concept of quasi-Fermi level useful in semiconductors? 2

   (c) If you want the marks to be displayed as $2 + 2$, use the command `\bdpart[2+2]` instead of the regular `\part[]` command. As for example: What is molecular orbital? Explain bonding and anti-bonding in molecular orbital. 2+2

   (d) If you want the subparts of the question to be appeared inline the use the command `\begin{inlinesubparts} \item, \item, etc.---\end{inlinesubparts}`. As for example: Draw schematic diagrams to show splitting of two molecular orbitals due to resonance interactions with the orbitals: (i) having same energy, and (ii) having different energies. 2+2

2. (a) For units, you can use SI unit, as for example 2 µm can be achieved by using the command `\SI{2}{\micro\meter}`. In case you need to use the unit for an expression as for example $20sin(\omega t)$ mA, right after the expression, you can use the command `\si{\milli\ampere}`. 2

   (b) Two resistors of values 1 kΩ and 4 kΩ are connected in series across a constant voltage supply of 100 V. A voltmeter having an internal resistance of 12 kΩ is connected across the 4 kΩ resistor. Draw the circuit and calculate: 4

   (i) True voltage across 4 kΩ resistor before the voltmeter was connected.

   (ii) Actual voltage across 4 kΩ resistor after the voltmeter is connected and voltage recorded by the voltmeter.

   (iii) change in supply current when voltmeter is connected.

   (iv) Percentage error in voltage across 4 kΩ resistor.

   (c) Figure(pdf, png, etc) can be inserted using the `\includegraphics{nameOfFigure}` command as shown below. : Find the rms value of the current waveform of Fig.1. If the current flows through a 9 Ω resistor, calculate the average power absorbed by the resistor. 5

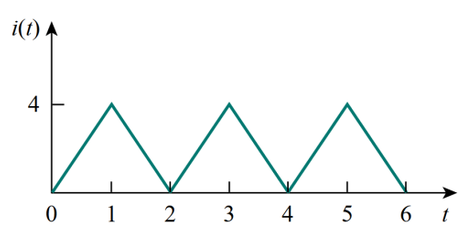

Fig. 1

3. (a) If you want to place two figures side by side then use minipage environment. As for example: Using nodal analysis, determine the potential across the 4 Ω resistor in Fig. 2 4

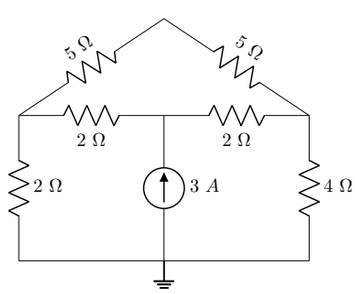

Fig. 2

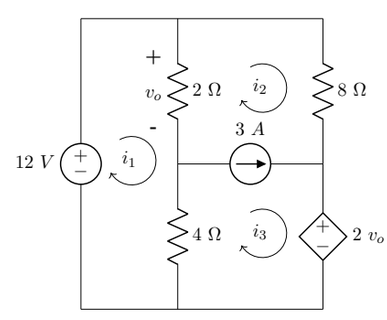

Fig. 3

(b) Use mess analysis to find currents and voltage v_o in the circuit of Fig. 3. 4

(c) If a table is needed to insert, then you can use either tabular or tabulrx. In the table as shown in Table 1, the data are given for a general purpose Silicon diode, draw the I-V characteristic curve. 2

Table 1: Your Table Title Here

SL.no	Forward bias voltage (V)	Forward bias current(mA)
1	0	0
2	0.2	0.0
3	0.4	0.1
4	0.5	0.5
5	0.53	1.0
6	0.6	8.2
7	0.66	19.5
8	0.7	53.5
9	0.71	83.1
10	0.73	112.7

OR

(a) Find the Thevenin's equivalent circuit of Fig. 4 to the left of the terminal. 4

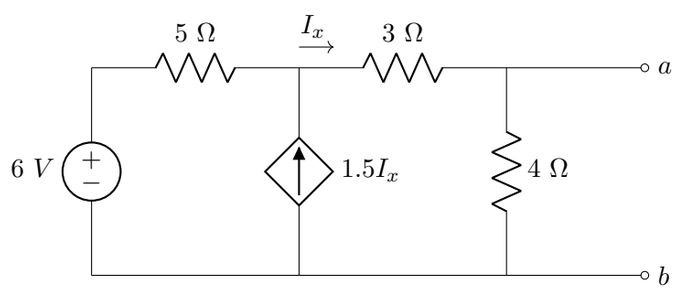

Fig. 4

(b) Find the magnitude R_L for the maximum power transfer in the circuit shown in Fig. 5. Also find out the maximum power. 4

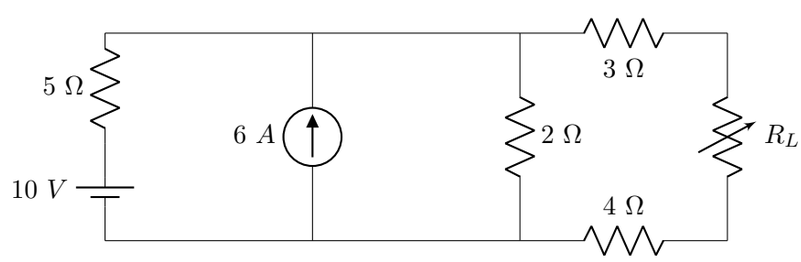

Fig. 5

(c) Write short notes on Real power and Reactive power. 2

Part-B

*[Answer **all** the questions.]*

4. (a) Determine I_{BQ}, I_{CQ}, V_{CEQ}, V_B, V_C and V_{BC} for the fixed-bias configuration shown in Fig. 6. 4

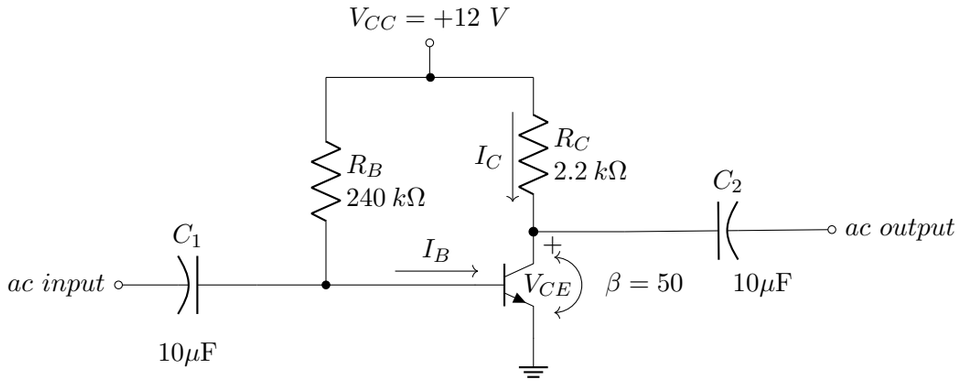

Fig. 6

(b) Determine the saturation level for the network of Fig. 6. 2

(c) For the emitter bias network of Fig. 7 determine I_B, I_C, V_{CE}, V_C, V_E and V_B for the fixed-bias configuration shown in 4

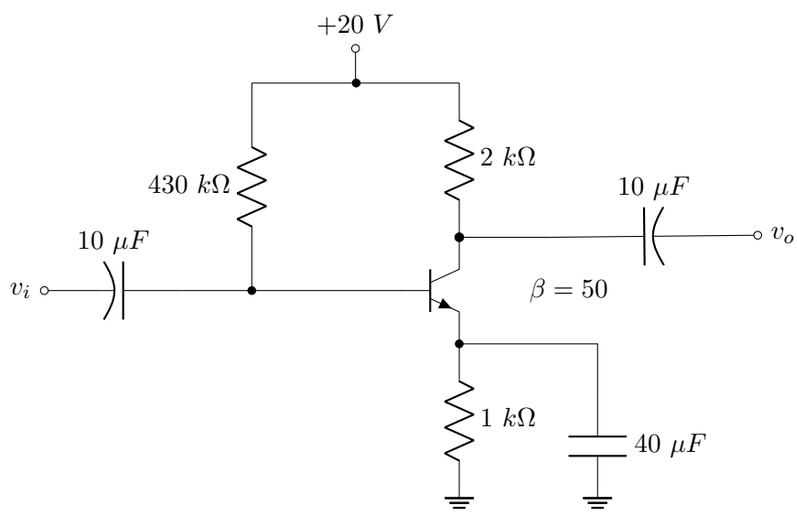

Fig. 7

5. (a) Using the command `\ce{..}` you can typeset the chemical formula and equations. As for example: Write down whether the given chemical formulas are organic or inorganic. 2

- Water: `\ce{H2O}`, H_2O
- Benzene: `\ce{C6H6}`, C_6H_6
- Hydrogen peroxide: `\ce{H2O2}`, H_2O_2
- Acetic acid: `\ce{C2H4O2}`, $C_2H_4O_2$
- Glucose: `\ce{C6H12O6}`, $C_6H_{12}O_6$

(b) The chemical equation can also be written using the command `\ce{}`. As for example: Explain the following two chemical equations. 2+2

- `\ce{2H2 + O2 -> 2H2O}` typesets $2\,H_2 + O_2 \longrightarrow 2\,H_2O$
- `\ce{CO2 + C -> 2 CO}` typesets $CO_2 + C \longrightarrow 2\,CO$

(c) Drawing a molecule consists mainly of connecting groups of atoms with lines. Simple linear formulae can be easily drawn using the chemfig package and using the command `\chemfig{*6((=O)-N(-)-(*5(-N=-N(-)-))=-(=O)-N(-)-)}`, as shown in the following example: Identify the given chemical formula. 1+4

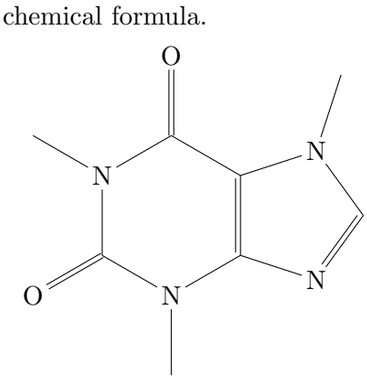

6. (a) Simplify the Boolean function $F(w,x,y,z) = \sum(1,3,7,11,15)$. Which has don't-care condition: $d(w,x,y,z) = \sum(0,2,5)$. 4

(b) Simplify $F(A,B,C,D) = \sum(0,1,2,5,8,9,10)$ in product of sums. 4

(c) Define Minterms and Maxterms and briefly explain De Morgan's law. 2

OR

(a) Simplify the Boolean function $F(w,x,y,z) = \sum(0,1,2,4,5,6,8,9,12,13,14)$. 4

(b) A transmission line has the following per-unit length parameters: $L = 0.5\,\mu\mathrm{H\,m^{-1}}$, $C = 200\,\mathrm{pF\,m^{-1}}$, $R = 4\,\Omega\,\mathrm{m^{-1}}$ and $G = 0.02\,\mathrm{S\,m^{-1}}$. Calculate the propagation constant and characteristics impedance of this line. If the line is 30 cm long, what is the attenuation in dB. 4

(c) If you only want the unit as symbol mode like $R = 4\,\Omega/\mathrm{m}$ instead of the conventional unit $R = 4\,\Omega\,\mathrm{m^{-1}}$, wrap the unit in braces: as shown below. 2½

```
{
\sisetup{per-mode = symbol}
\si{\milli\volt\per\pico\second}
}
```

List of the relevant equations:

$$\begin{bmatrix} A_r \\ A_\theta \\ A_\phi \end{bmatrix} = \begin{bmatrix} \sin\theta\cos\phi & \sin\theta\sin\phi & \cos\theta \\ \cos\theta\cos\phi & \cos\theta\sin\phi & -\sin\theta \\ -\sin\phi & \cos\phi & 0 \end{bmatrix} \begin{bmatrix} A_x \\ A_y \\ A_z \end{bmatrix}$$

$$\nabla \times \mathbf{A} = \frac{1}{r\sin\theta} \begin{vmatrix} \hat{r} & r\hat{\theta} & r\sin\theta\hat{\phi} \\ \dfrac{\partial}{\partial r} & \dfrac{\partial}{\partial \theta} & \dfrac{\partial}{\partial \phi} \\ A_r & rA_\theta & r\sin\theta A_\phi \end{vmatrix}$$

$$= \frac{1}{r\sin\theta}\left[\hat{r}\left(\frac{\partial}{\partial\theta}(\sin\theta A_\phi) - \frac{\partial A_\theta}{\partial\phi}\right) + \hat{\theta}\left(\frac{1}{\sin\theta}\frac{\partial A_r}{\partial\phi} - \frac{\partial}{\partial r}(rA_\phi)\right) + \hat{\phi}\left(\frac{\partial}{\partial r}(rA_\theta) - \frac{\partial A_r}{\partial\theta}\right)\right]$$

$$\begin{bmatrix} a_x \\ a_y \\ a_z \end{bmatrix} = \begin{bmatrix} \sin\theta\cos\phi & \cos\theta\cos\phi & -\sin\phi \\ \sin\theta\sin\phi & \cos\theta\sin\phi & \cos\phi \\ \cos\theta & -\sin\theta & 0 \end{bmatrix} \begin{bmatrix} a_r \\ a_\theta \\ a_\phi \end{bmatrix}.$$