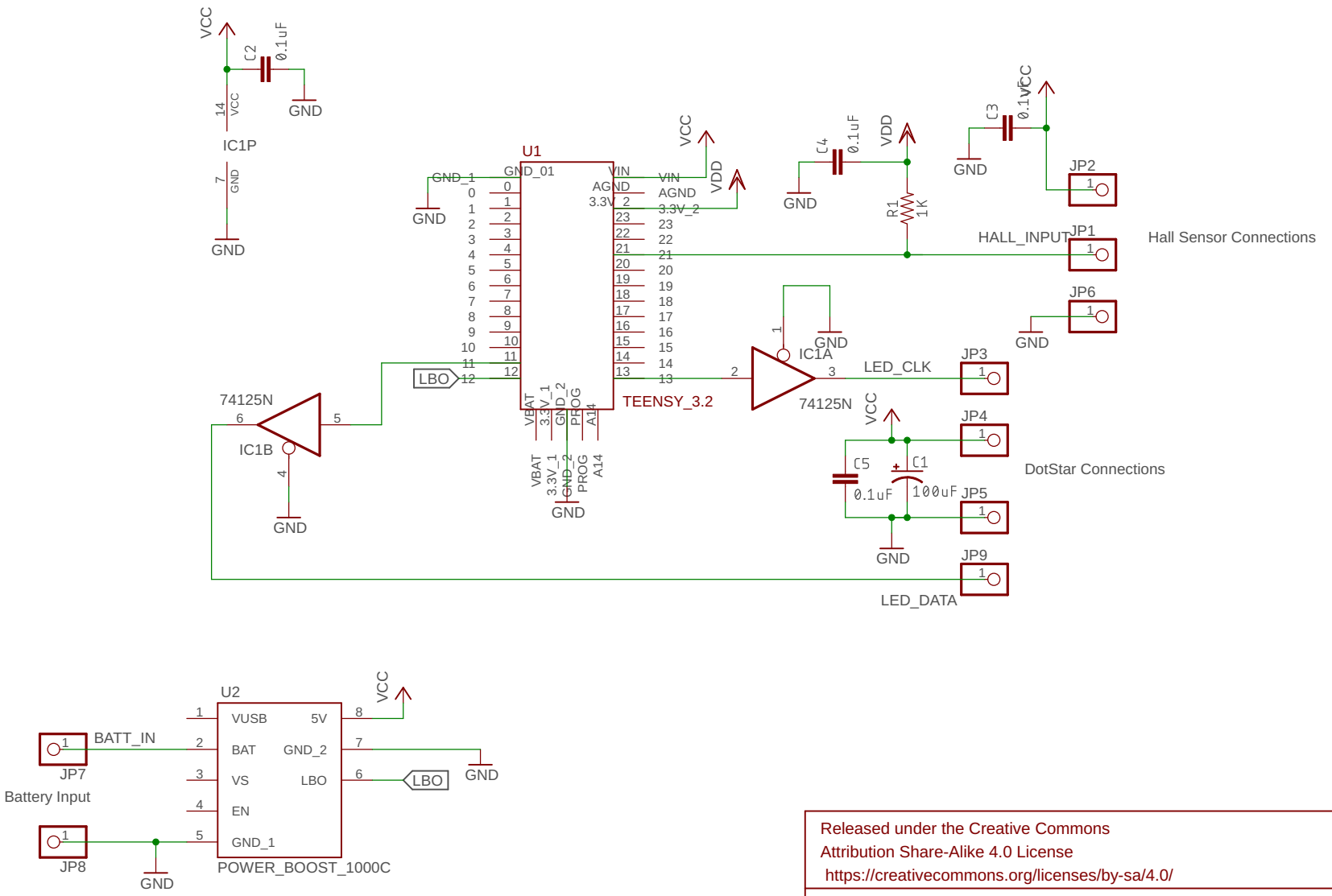

Released under the Creative Commons
Attribution Share-Alike 4.0 License
https://creativecommons.org/licenses/by-sa/4.0/

TITLE: POV_02

Design by:

REV:

Date: 5/13/2018 1:44 PM

Sheet: 1/1