Getting Started

with

micro:bit

raspikidd

© RaspiKidd 2022

What is a micro:bit

- A computer that fits in your pocket
- Introduces you to Software (a computer program/app) and Hardware (the computer)
- You can program it to interact with you and the outside world

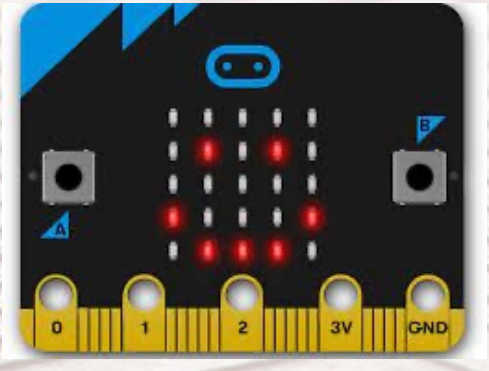

Original micro:bit

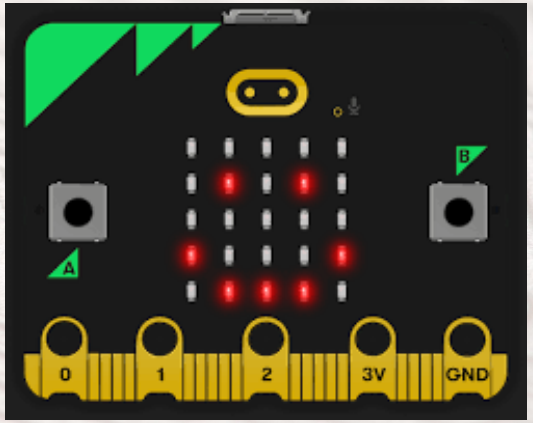

micro:bit 2.0

© RaspiKidd 2022

Features

micro:bit v1

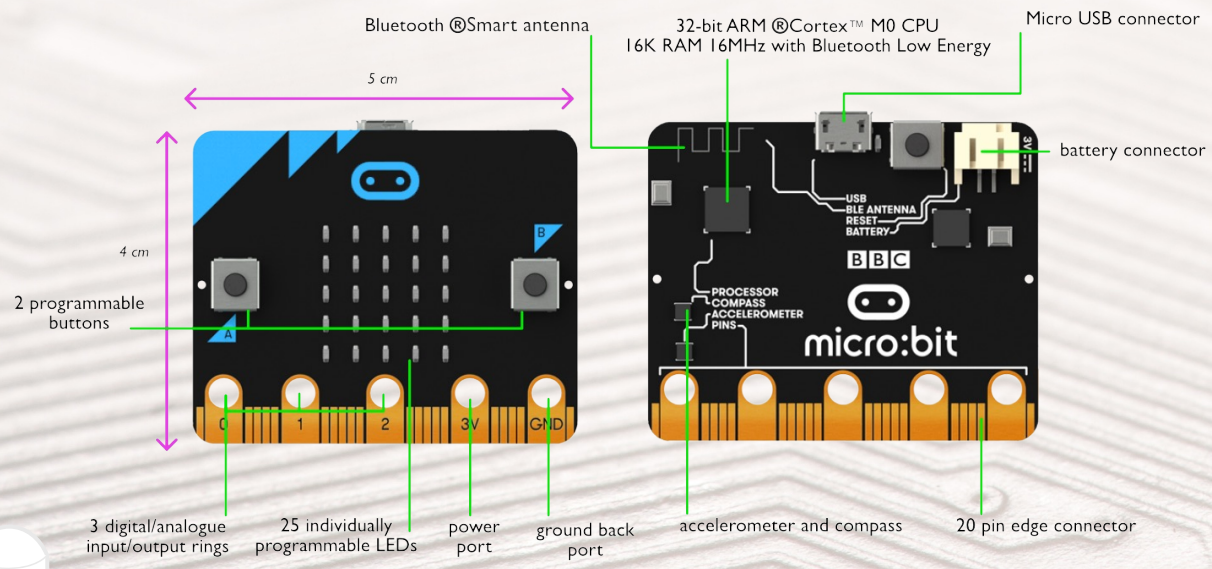

micro:bit v2

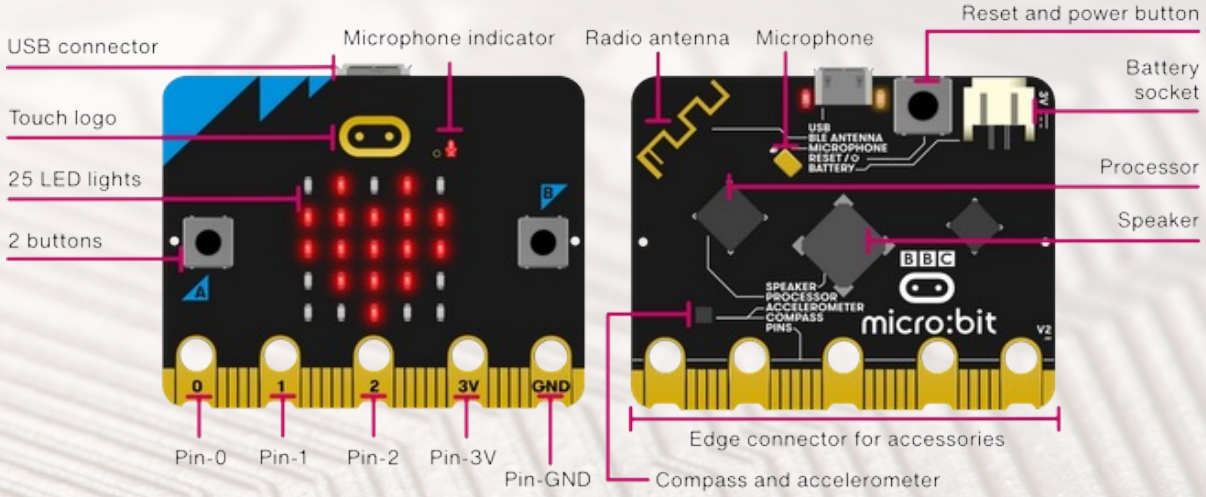

© RaspiKidd 2022

How to Program

You can create programs for the micro:bit using:

- Scratch
- MakeCode
- EduBlocks
- Micro Python

© RaspiKidd 2022

Hello World

We are now ready to code our first program as per programming tradition when learning a new programming language we start with a Hello World program.

To get started go to www.makecode.microbit.org

Using micro:bit classroom www.classroom.microbit.org

Let's code the hello world program together!

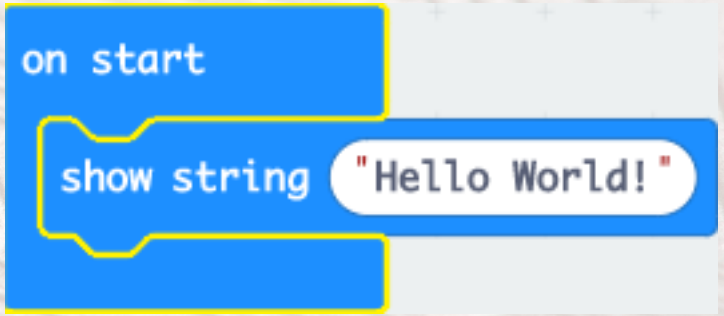

© RaspiKidd 2022

Downloading

To download your code to the micro:bit:

1. Click on the 3 dots next to Download
2. Follow the instructions on screen
3. Click Download
4. You should now have your first program successfully downloaded to your micro:bit

© RaspiKidd 2022

Challenge

Now that you know how to send messages to the micro:bit.

Remix the code and get the micro:bit to say hello followed by your name.

© RaspiKidd 2022

Conclusion

What have you learned to do within today's session?

© RaspiKidd 2022