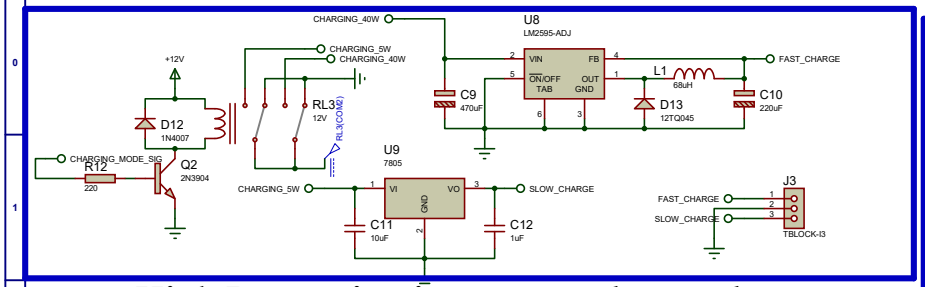

High Power circuit output and control

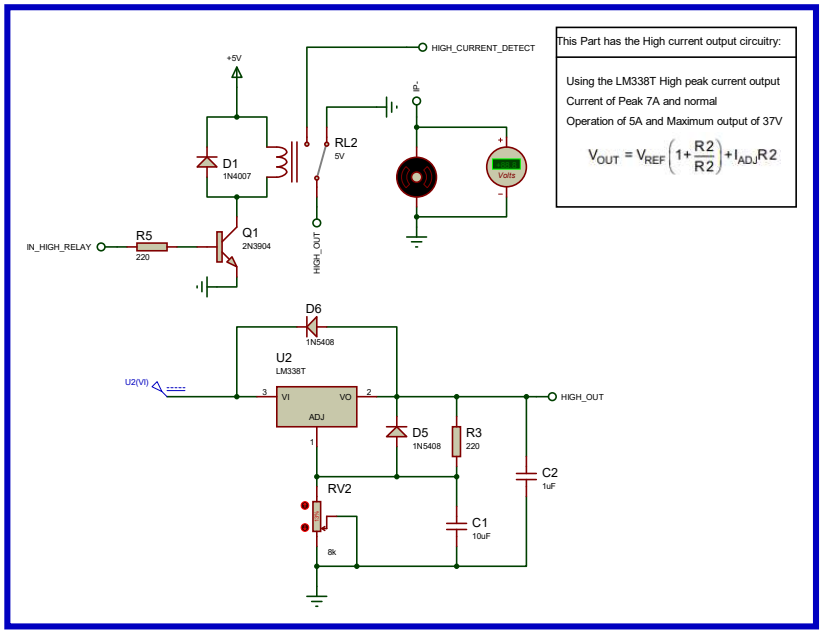

LCD & Buttons UI menu control

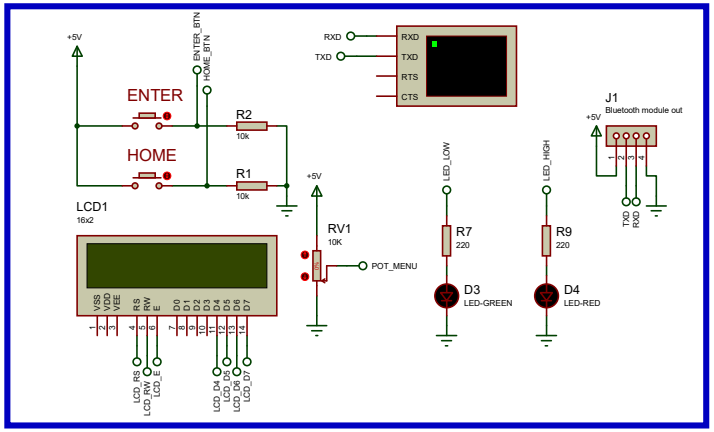

Low Power output and control

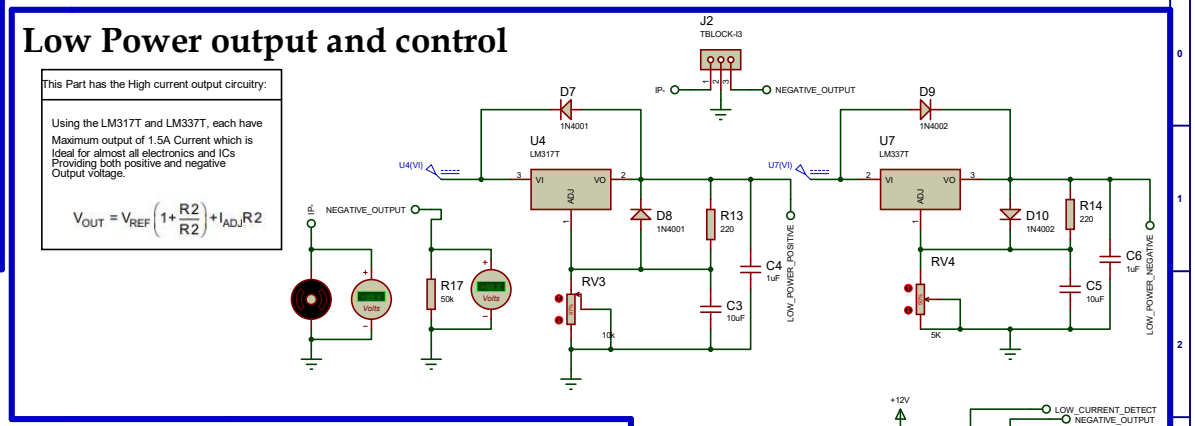

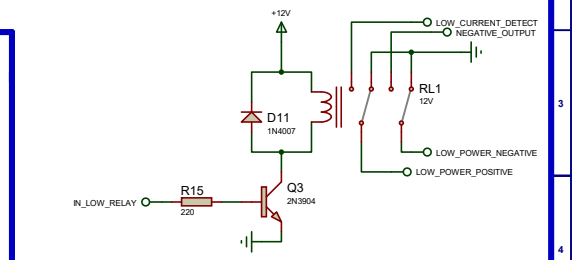

Microcontroller Pinouts/Connections

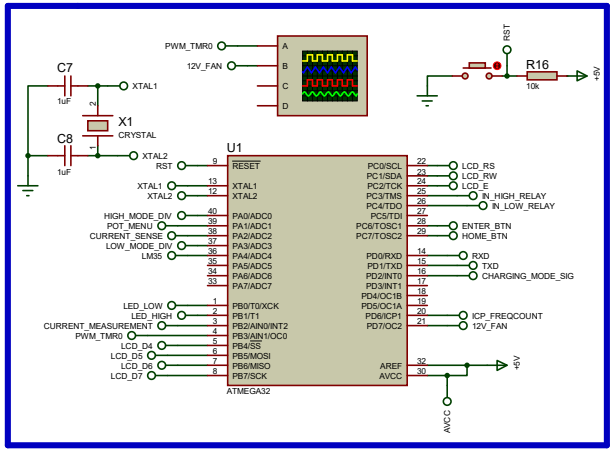

Voltage & Current measurement section

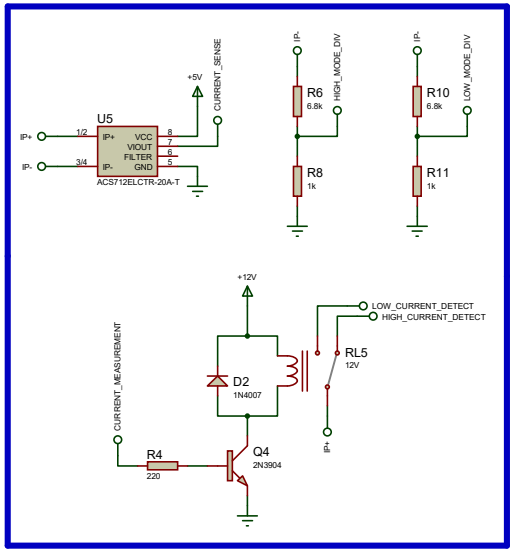

Temperature sensor + PWM fan control

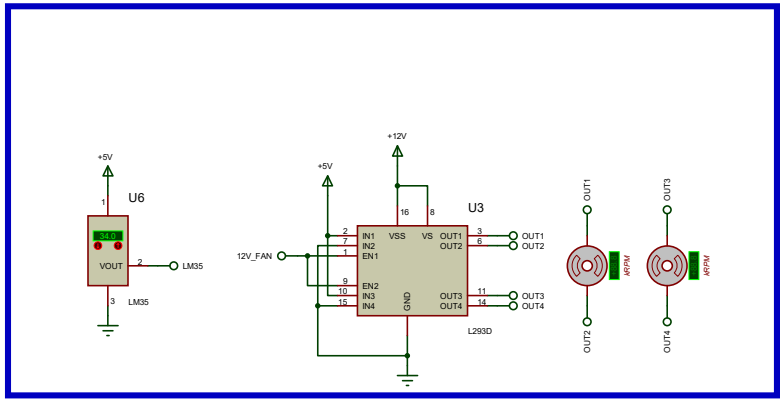

FILE NAME:	Smart Power Supply V2.pdsprj
DESIGN TITLE:	Smart Power Supply V2.pdsprj
PATH:	G:\Work Files\Proteus\SPS V2.0\Smart Power Supply V2.pdsprj
BY: @AUTHOR	REV:@REV
BOARD: @BOARD	
DATE:	10/28/2024
PAGE:	1 of 1
TIME:	8:14:14 PM