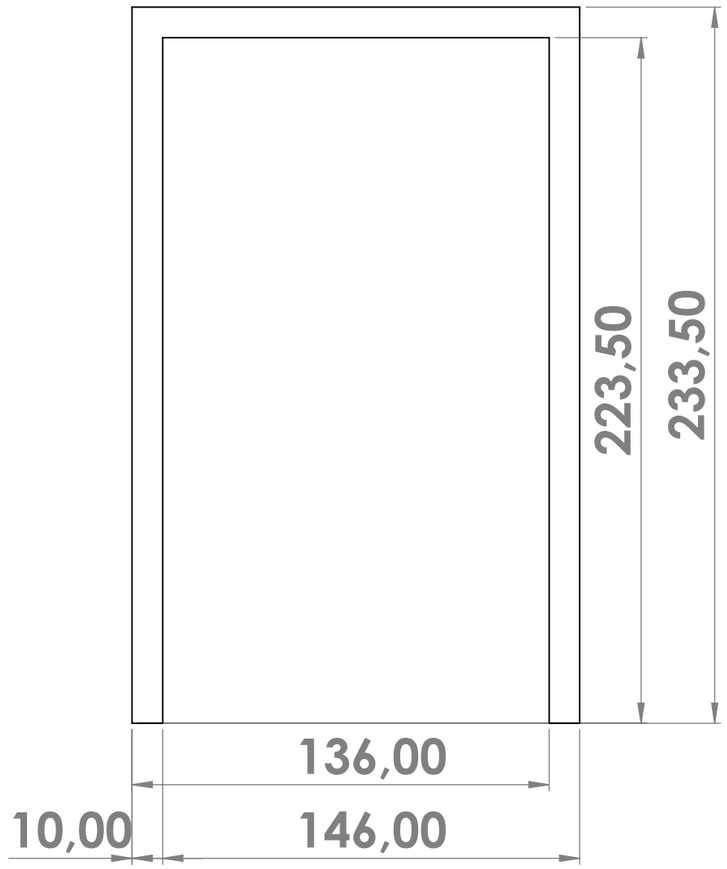

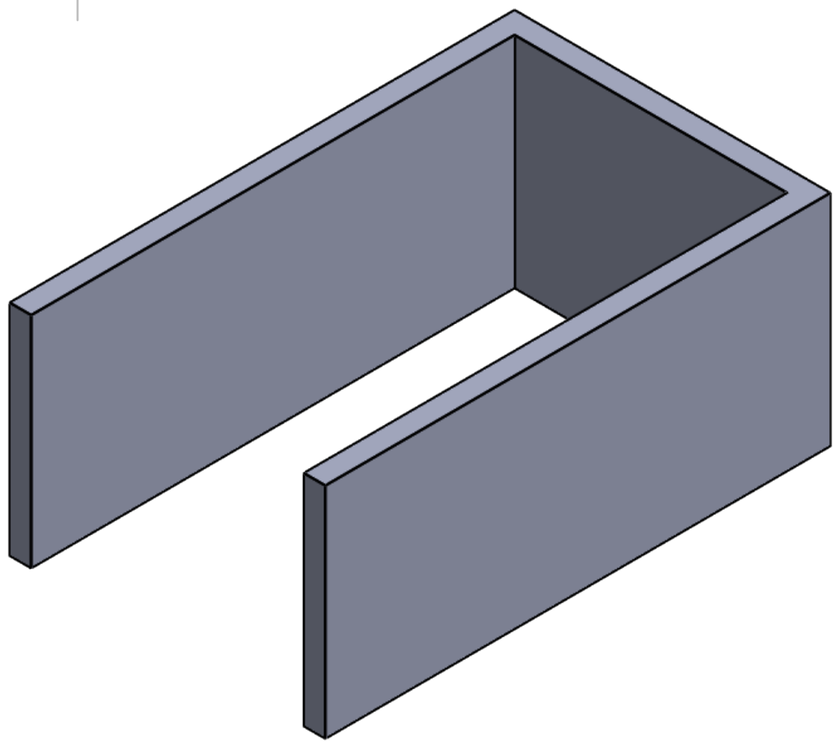

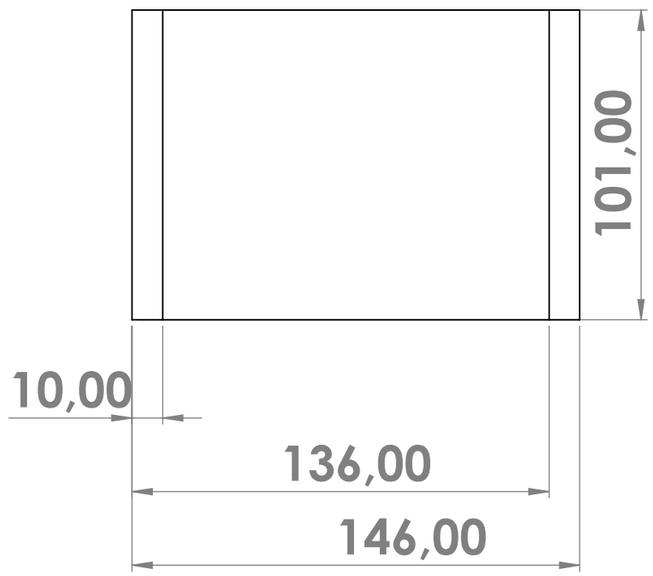

UNLESS OTHERWISE SPECIFIED: DIMENSIONS ARE IN MILLIMETERS SURFACE FINISH: TOLERANCES: LINEAR: ANGULAR:	FINISH: 08/06/2021		DEBURR AND BREAK SHARP EDGES	DO NOT SCALE DRAWING	REVISION	
	NAME	SIGNATURE	DATE	TITLE: BASIC MODEL		
DRAWN						
CHK'D						
APPV'D						
MFG						
Q.A				MATERIAL: Placa_U_Amostra	DWG NO.	A3
				WEIGHT:	SCALE:1:5	SHEET 1 OF 1

SOLIDWORKS Educational Product. For Instructional Use Only.